ARNO®
WERKZEUGE

We have a passion for precision.

SPT SUNCOAST INC. PRECISION TOOLS
ESTABLISHED 1963

TURNING

2013-2

Tools and Indexable Inserts for Turning

www.arnousa.com

TÜV SÜD ISO 9001

ARNO®
WERKZEUGE

We have a passion for precision.

We approach the challenges of our customers with passion and enthusiasm to research, develop and precisely manufacture our tools. 70+ years of experience goes into each of our tools. ARNO is certified quality and precision at its best.

ZERTIFIKAT ◆ CERTIFICATE ◆ 認證證書 ◆ СЕРТИФИКАТ ◆ CERTIFICADO ◆ CERTIFICAT

TÜV SÜD Management Service

CERTIFICATE

The Certification Body
of TÜV SÜD Management Service GmbH

certifies that

ARNO WERKZEUGE

Karl-Heinz Arnold GmbH
Karlsbader Straße 4, D-73760 Ostfildern

has established and applies
a Quality Management System for

engineering, storage and sales of
cutting tools and workholding tools.

An audit was performed, Report No. **70013372**

Proof has been furnished that the requirements
according to

ISO 9001:2008

are fulfilled. The certificate is valid in conjunction
with the main-certificate until **2015-11-11**

Certificate Registration No. **12 100 21067/01 TMS**

Munich, 2012-12-03

IAF

QMS-TGA-ZM-07-92

TÜV SÜD Management Service GmbH • Zertifizierungsstelle • Ridlerstraße 65 • 80339 München • Germany

TÜV®

CONTENTS

	Page
About Us	4 – 7
Service Worldwide	8 – 9
ARNO-Turning Systems	10 – 11

0

External Machining

• ISO-Designation System	14 – 15
• Overview	16 – 19
• Holders and Spare Parts	20 – 75

1

Internal Machining

• ISO-Designation System	80 – 81
• Overview	82 – 83
• Boring Bars and Spare Parts	84 – 119

2

Indexable Inserts

• ISO-Designation System	124 – 125
• Overview / Preselection	126
• Chip Breakers	127 – 141
• Indexable Inserts and Grades	
– Carbide	142 – 185
– High Positive	186 – 211
– Cermet	212 – 225
– CBN / PCD	226 – 240

3

DECO-Cut for CNC Swiss Lathes

• Overview	242 – 243
• Holders and Spare Parts	244 – 247
• Indexable Inserts	248 – 261
• ISO Insert PF2 Geometry	262 – 263
• Application Reference	264 – 265

4

Information

• Material - Cross Reference	268 – 272
• Insert Wear and Solutions	273 – 274
• Application Reference	274 – 277
• Recommended Cutting Data	278 – 285

i

Index 286 – 287

A

Technical changes, errors and omissions excepted.

ARNO® WERKZEUGE

1941
Emil Arnold (*24.7.1904), decides to become self-employed and establishes „Emil Arnold Lehrenbau“ in Franziskanergasse 7 in Esslingen.

1962
On April 1st. Karl-Heinz Arnold establishes „Karl-Heinz Arnold Werkzeuge“ in his father's company. Purpose: Sales of carbide cutting tools

1965
Company re-structuring from “Emil Arnold” to “Emil Arnold KG” and more focus on manufacturing of special tools and jigs for special purpose machines as well as mass production of tool holders.

1966
Both companies moving to the industrial area of „Ruit Zinsholz“, Ostfildern, near Stuttgart.

1967
Start of sales for indexable carbide inserts for turning and milling.

1979
Together, in a combined production facility with “Emil Arnold”, ARNO starts focusing on market opportunities. After only one year of research and development a mini copy turning system with a patented insert clamping is introduced.

1981
More developments of own tools, for example the NC-grooving and turning system.

1989
Entering into grinding technology

Tradition in Precision

„Local family business gains global position as a market leader.“

In 1941 Emil Arnold establishes „Lehrenbau” in Esslingen am Neckar. Initially manufacturing mainly measurement jigs and gauges. Because he always gave his customers exactly what they specified he established himself through the high quality of his products.

Together with his son Karl-Heinz Arnold they put their heart and soul into the company and were always open to new developments. He had a vision to be represented with his cutting tools in all industries all over the world. In 1962 his son forms the company Karl-Heinz Arnold GmbH which under the name ARNO-Werkzeuge began focussing on sales of carbide tools. Both companies were constantly looking for market opportunities with the customers in mind.

In 1987 Klaus-Michael Arnold joined the company and became Managing Director in 1992. In 2002 Josef Storf became joint Managing Director. In the spirit of the company founder, the product portfolio is expanding and the search for new sales channels are constanly being explored. In 2004 Arno (UK) Ltd becomes the first overseas sister company, followed by sister companies in Italy, Russia and the USA. Due to the constant developments of the product range and the high level of service provided, today ARNO-Werkzeuge is globally renowned for its high quality cutting tools.

1995
Certification of Emil Arnold GmbH & Co KG to DIN ISO 9002. Certification of ARNO-Werkzeuge to DIN EN ISO 9001.

2002
Expansion of grinding dept. and move to new building.

2004
Setting up sales company in UK.

2006
Setting up sales company in Italy.

2009
Setting up sales companies in USA and Russia.

Building of new Sales and Logistics center in Ostfildern.

2010
New products are introduced at the AMB exhibition: SA part-off system, the AMS (Arno Mini System) and the SIM boring bars. Also expansion of milling portfolio with with new FTA, Duo-Mill and Roc-Mill systems.

2012
The AKB drill is introduced on the AMB exhibition as well as additional insert geometries for the Shark-Drill2, all of which opening new opportunities for the company.

ARNO®
WERKZEUGE

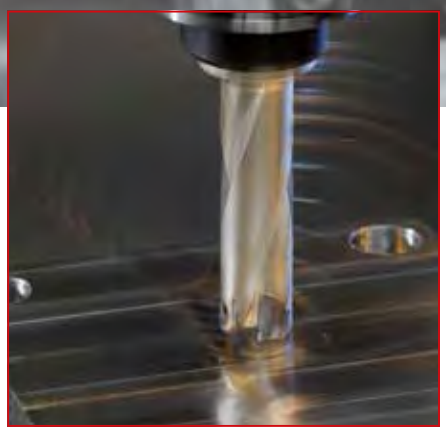

Grooving

Whether it is radial or axial grooving, parting off, groove turning or internal grooving, you will find the ideal tool from Arno-Werkzeuge.

Drilling

From 1mm to 114mm diameter you will find a solid carbide drill or a solution with indexable inserts from our extensive product range.

Turning

ARNO-Werkzeuge offers reliable tools utilizing various inserts for your most demanding internal or external machining applications as well as tools and inserts for threading.

Strength from Experience, Competence and Development

„For the future you need a partner with future“

By working closely with partners inside and outside the company, we are very capable of satisfying individual requirements which often lead to special tooling. These tools are consistently improved and might find their way into our standard portfolio of catalog tooling later.

New materials and expectations of constant improvement of machine time, motivate us to research and develop new tooling and cutting tool materials. That means developing modular tooling systems that are modified for each individual application. Our high performance but still affordable solutions include our extensive range of drilling systems, grooving systems, milling cutters and our huge range of indexable inserts (not just for turning) as well as tool holding and vending solutions.

Our technical support and advice follow any of our high quality tools. Our highly competent team will support you with service even after you have made your decision to purchase.

Milling

Face-mills, square shoulder-mills, chamfer-mills, milling cutters with round inserts, roughing cutters and solid carbide cutters. We have the right cutter for your application.

Tool Vending

Secure storage, monitoring and usage reporting guaranteed with our highly flexible StoreManager solution.

Work Holding Equipment

NC – machine vice in various executions of number of jaws and widths ensure maximum component clamping for the modern manufacturing.

Service to Size

Individual Solutions

Despite our wide range of standard tools which will cover a majority of applications, sometimes you may just need a solution for a specific request. ARNO can offer you a special tool which suits your application exactly.
A perfect solution without any compromises.

Overnight Delivery

When urgency is required ARNO is there to help. Place your order for standard tools by 3:30PM Central Time and our tools could be on your machine the next day. For special solutions we need a little longer but then you will also be getting a high quality tool just for your application.

Everything Under One Roof

The high quality of our products is a result of having R&D, manufacturing and sales at one location. This also gives us the opportunity for testing, offering faster response time, better control and better prices.

Experienced External Sales Team

You are never left alone with an ARNO product. Our experienced external ARNO sales team is always available for service and support.

Our Application Engineers

When you have a problem with an application our application engineers will be available to advice you on technical issues.

Ordering Hotline

Wherever you may be in the world you will be able to contact an ARNO representative. Take advantage of our competence, we look forward to being of service.

Globally available – Service where you need it

ARNO-Werkzeuge is represented world wide, it is important to us that we can service you where you need it. Our distributors and sister companies are always local and easy to contact.

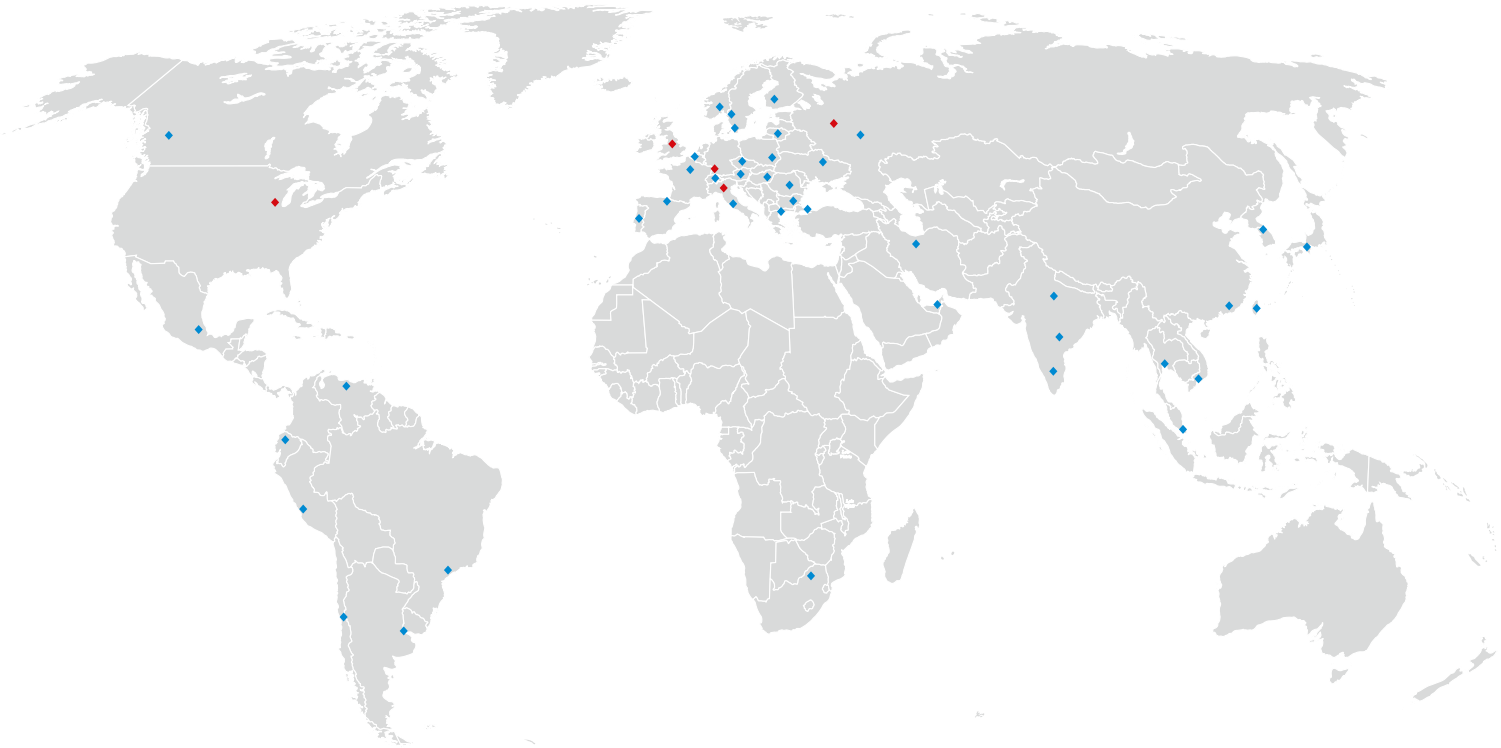

◆ ARNO location ◆ Distributor

ARNO-Werkzeuge USA, LLC
1101 W DIGGINS ST
HARVARD, IL 60033

Tel.: 815 943 4426
Fax: 815 943 7156
info@arnousa.com
www.arnousa.com

Karl-Heinz Arnold GmbH | Karlsbader Str. 4 | D-73760 Ostfildern
☎ +49 711 34 802-0 | 🖷 +49 711 34 802-130 | info@arno.de | www.arno.de

ARNO (UK) Limited | Unit 3, Sugnall Business Centre | Sugnall, Eccleshall | Staffordshire | ST21 6NF
☎ +44 01785 850 072 | 🖷 +44 01785 850 076 | sales@arno.de | www.arno-tools.co.uk

ARNO Italia S.r.l | Via J. F. Kennedy 19 | 20871 Vimercate (MB)
☎ +39 039 68 52 101 | 🖷 +39 039 60 83 724 | info@arno-italia.it | www.arno-italia.it

ARNO RU Ltd. | Krassnaja Ul. 38 | RU-600015 Vladimir
☎/🖷 +7 4922 541125 | **COT** +7 4922 541135 | info@arnoru.ru | www.arnoru.ru

ARNO®
WERKZEUGE

Page 13

External & Internal Machining

ISO tool holders and boring bars with different designs and indexable inserts.

Page 123

Indexable Inserts

With negative, positive and high positive geometries for all materials.

Page 241

DECO-Cut

Dedicated boring bars and turning holders for auto lathe turning.

Turn up the performance. ARNO-Turning Systems

„Quality, no matter how you turn it.“

The ARNO-range of turning tools offer a huge selection of tool holders for internal and external machining. In addition to the DECO-Cut, which is developed for auto lathes, we offer tools for threading as well as combination tools for turning and drilling/boring. Universal and especially developed inserts guarantee you the process reliability of ARNO turning tools. The ARNO range includes positive, high positive and negative inserts for every application from roughing to fine finishing.

Thread Turning

Starting at 3,2mm diameter we can offer most forms for thread turning.

Shark-Cut/Shark-Cut Rebore

The multi-function tools Shark-Cut and Shark-Cut Rebore can be used for drilling (only Shark-Cut), turning and boring.

AMS / SIM

The Arno-Mini-System and the SIM tools, are ideal for internal turning of small diameter components.

ARNO®
WERKZEUGE

Order Hotline: 800-943-4426

Monday - Friday: 8AM to 5PM Central Time

EXTERNAL MACHINING

External Machining

- ISO-Designation System 14 – 15
- Overview 16 – 19
- Tool Holders and Spare Parts 20 – 75
  - Top Clamping 20 – 28
  - Lever Lock Clamping 29 – 39
  - Screw Clamping 40 – 75
- Torque Screwdriver Sets 76

1

1

1

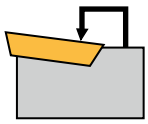

C

Top clamping

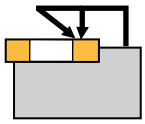

D

Top and hole clamping

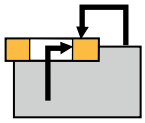

M

Top and hole clamping

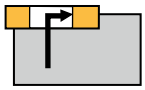

P

Lever lock clamping

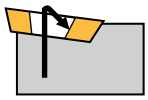

S

Screw clamping

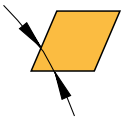

80° C
55° D
75° E
86° M
35° V

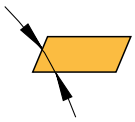

85° A
82° B
55° K

H

L

O

P

R

S

T

W

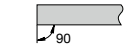

A

B

C

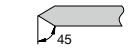

D

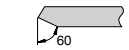

E

F

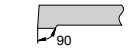

G

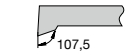

H

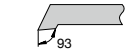

J

K

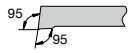

L

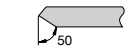

M

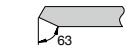

N

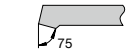

R

S

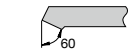

T

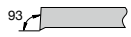

U

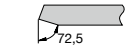

V

W

Y

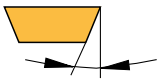

3° A
5° B
7° C
15° D
20° E
25° F
30° G
0° N
11° P

Others O

R

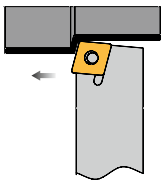

L

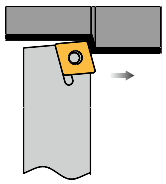

N

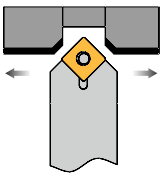

P	C	L	N	L
Clamping method	Insert shape	Style	Clearance angle	Holder execution

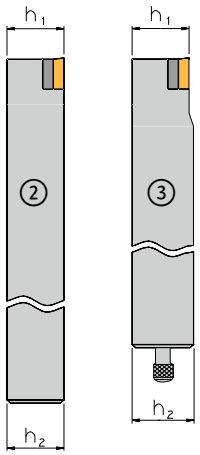

Height of cutting edge „h_1“ in mm.
For tool holders ② the height of the cutting edge „h_1“ is equal to the height of the shank „h_2“.
For tool holders ③ the height of the cutting edge „h_1“ is unequal to the height of the shank „h_2“.

20

Shank height

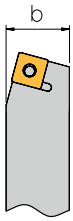

Width „b“ in mm.
For cartridges the dimension „b“ does not exist. It is replaced by the letters „CA“.

20

Shank width

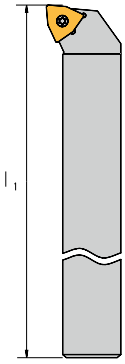

	l_1 [mm]		l_1 [mm]
A	32	**M**	150
B	40	**N**	160
C	50	**P**	170
D	60	**Q**	180
E	70	**R**	200
F	80	**S**	250
G	90	**T**	300
H	100	**U**	350
J	110	**V**	400
K	125	**W**	450
L	140	**Y**	500
Special length ②		**X**	

K

Length

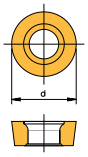

d [mm]

06
08
10
12
16
20
25
32

d [mm]	[inch]	[mm]	[mm]
06	5/32	3,97	**03**
08	3/16	4,76	**04**
09	7/32	5,56	**05**
11	1/4	6,35	**06**
16	3/8	9,525	**09**
22	1/2	12,7	**12**
27	5/8	15,875	**15**
33	3/4	19,05	**19**
44	1	25,4	**25**

12

Insert size

Special product information can be indicated by an internal company coding system at the 10th position.

...

Additional coding system

1

1

Top Clamping – Negative

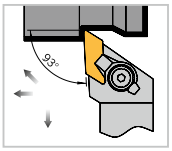

CKJN R/L
Page 20

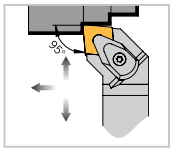

DCLN R/L
Page 23

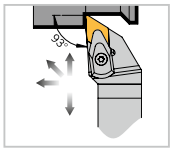

DDJN R/L
Page 24

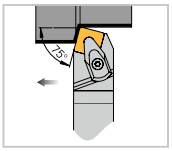

DSBN R/L
Page 24

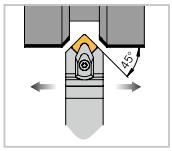

DSDN N
Page 25

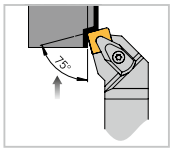

DSKN R/L
Page 25

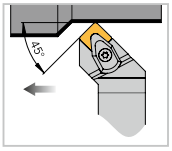

DSSN R/L
Page 26

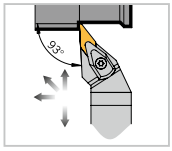

DVJN R/L
Page 26

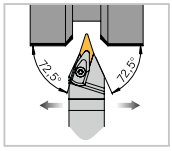

DVVN N
Page 27

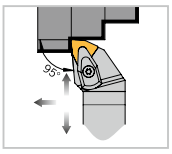

DWLN R/L
Page 27

Top Clamping – Positive

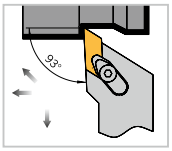

CKJC R/L
Page 20

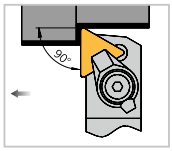

CTAP R/L
Page 21

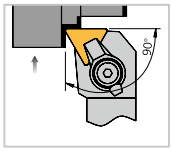

CTFP R/L
Page 21

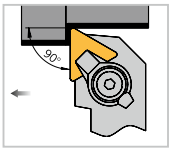

CTGP R
Page 22

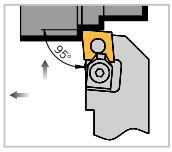

MCLC R/L
Page 22

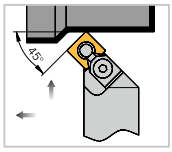

MSSC R/L
Page 23

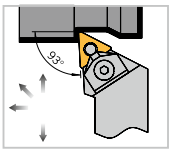

MTJC R/L
Page 28

Lever Lock Clamping – Negative

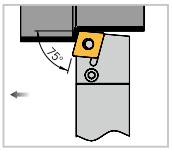

PCBN R/L

Page 29

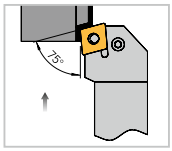

PCKN R/L

Page 29

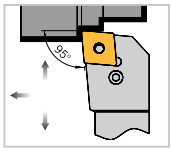

PCLN R/L

Page 30

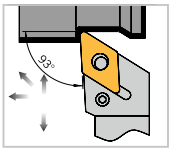

PDJN R/L

Page 31

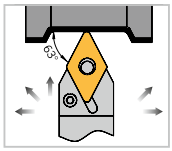

PDNN R/L

Page 31

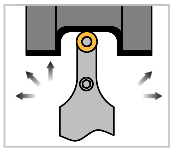

PRDC N

Page 32

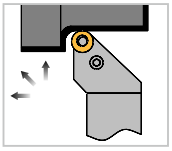

PRGN R/L

Page 33

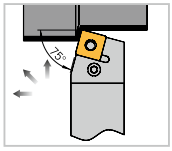

PSBN R/L

Page 34

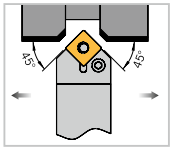

PSDN N

Page 35

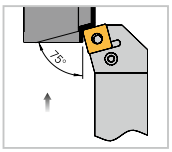

PSKN R/L

Page 36

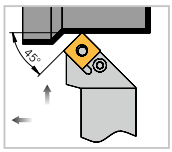

PSSN R/L

Page 37

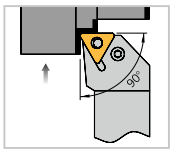

PTFN R/L

Page 38

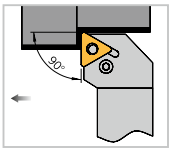

PTGN R/L

Page 38

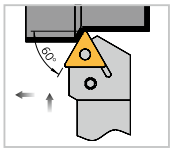

PTTN R/L

Page 39

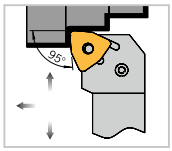

PWLN R/L

Page 39

Lever Lock Clamping – Positive

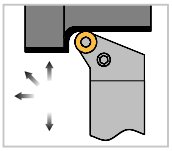

PRGC R/L

Page 33

1

Screw Clamping – Positive

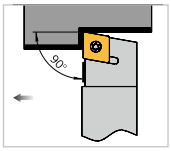

SCAC R/L
Page 40/41

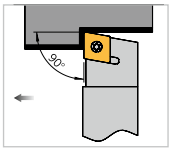

SCAP R/L
Page 41

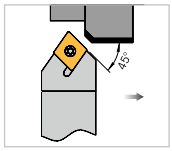

SCDC L
Page 42

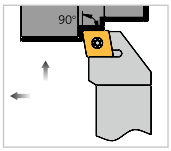

SCFC R/L
Page 43

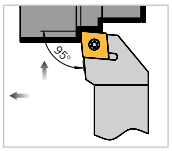

SCLC R/L
Page 44/45

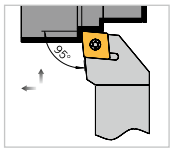

SCLP R/L
Page 45

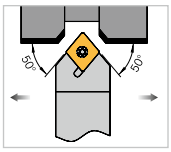

SCMC N
Page 46

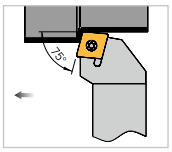

SCRC R/L
Page 47

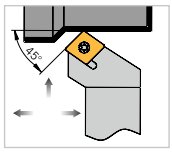

SCSC R/L
Page 48

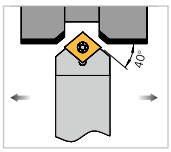

SCXP N
Page 48

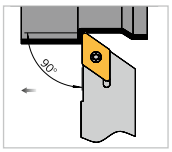

SDAC R/L
Page 49/50

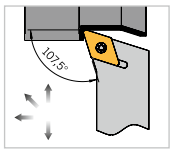

SDHC R/L
Page 51/52

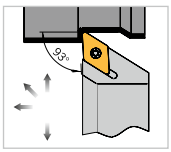

SDJC R/L
Page 53/54

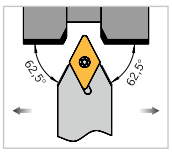

SDNC N
Page 55/56

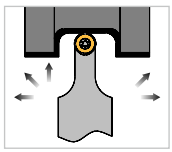

SRDC N
Page 57

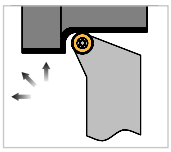

SRGC R/L
Page 58

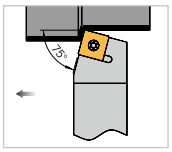

SSBC R/L
Page 59

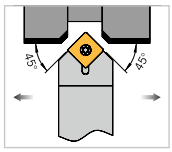

SSDC N
Page 60

Screw Clamping – Positive

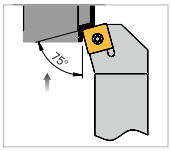

SSKC R/L

Page 61

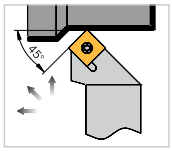

SSSC R/L

Page 62

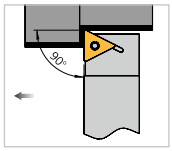

STAC R/L

Page 63/64

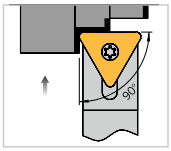

STCC N

Page 65

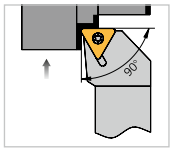

STFC R/L

Page 66

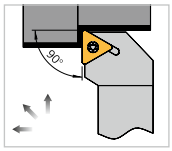

STGC R/L

Page 67

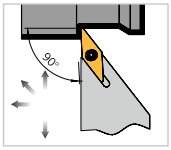

SVAC R/L

Page 68

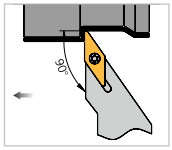

SVGC R/L

Page 68

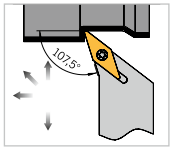

SVHC R/L

Page 69

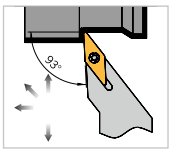

SVJC R/L

Page 70/71

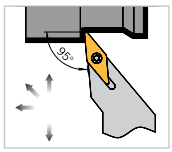

SVLC R/L

Page 71

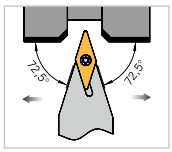

SVVC N

Page 72/73

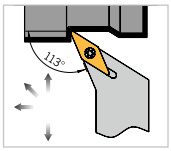

SVXC R/L

Page 73/74

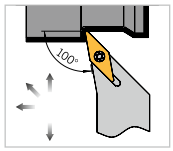

SVZC R/L

Page 74

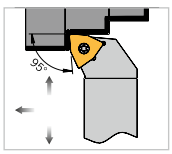

SWLC R/L

Page 75

Torque Screwdriver Set

Page 76

1

CKJN R/L Approach angle 93°

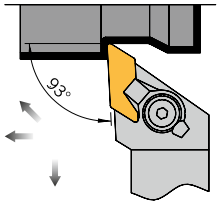

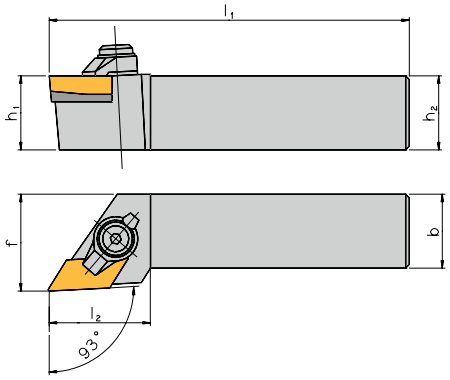

Right hand execution shown

Holder

Designation	h_1 / h_2	b	l_1	l_2	f	PG	Indexable insert
CKJN R/L 2525 M16	25	25	150	35	32,0	**8**	**KNUX 1604..**

Spare Parts

For holder	Clamp	Screw	Spring	Support pad	Pin	Spring and pin	Key
CKJN R.. 16	70,5 / 824	70,5 / 865	70,5 / 848	U000051R	7480901	70,5 / 841	KP 1321
CKJN L.. 16	70,5 / 825	70,5 / 865	70,5 / 848	U000051L	7480901	70,5 / 841	KP 1321

CKJC R/L Approach angle 93°

ARNO Kofler

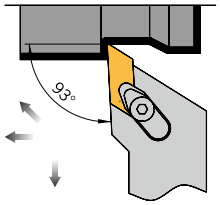

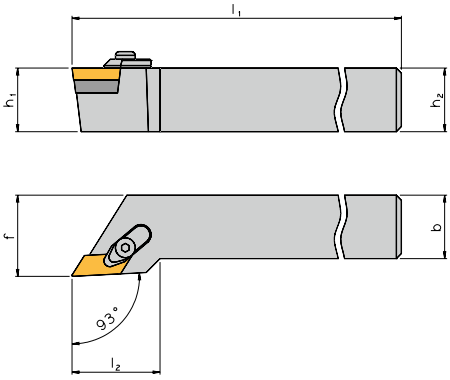

Right hand execution shown

Holder

Designation	h_1 / h_2	b	l_1	l_2	f	PG	Indexable insert
CKJC R/L 1616 H11	16	16	100	22	20,0	**16**	**KCGX 1103..**
CKJC R/L 2020 K11	20	20	125	22	25,0	**16**	**KCGX 1103..**
CKJC R/L 2525 M11	25	25	150	22	32,0	**16**	**KCGX 1103..**

Spare Parts

For holder	Clamp	Screw	Support pad	Screw for support pad	Key
CKJC R.. 11	KL 11	S 11	UPL 11 R	UPS	KS 2520
CKJC L.. 11	KL 11	S 11	UPL 11 L	UPS	KS 2520

Dimensions in mm

CTAP R/L Approach angle 90°

ARNO Kofler

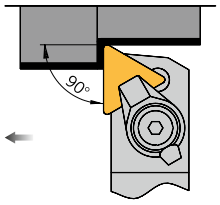

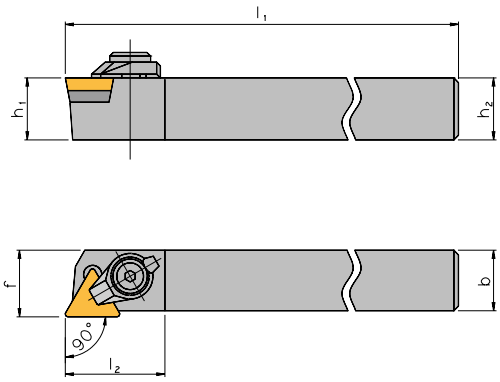

Right hand execution shown

Holder

Designation	h_1 / h_2	b	l_1	l_2	f	PG	Indexable insert
CTAP R/L 2020 K16	20	20	125	30	20,5	8	**TP.. 1603..**
CTAP R/L 2525 M16	25	25	150	30	20,5	8	**TP.. 1603..**

Spare Parts

For holder	Clamp	Screw	Support pad	Pin	Spring washer	Key
CT.. R/L.. 16	7485869	7480210	7480316	7480901	7480910	KP 1321

CTFP R/L Approach angle 90°

ARNO Kofler

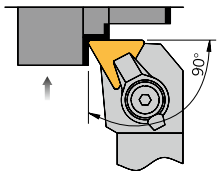

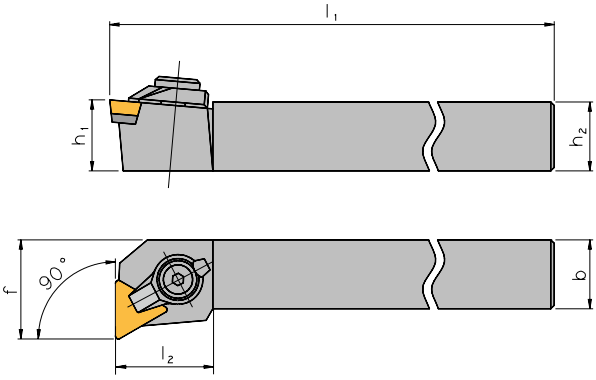

Right hand execution shown

Holder

Designation	h_1 / h_2	b	l_1	l_2	f	PG	Indexable insert
CTFP R/L 1010 E11	10	10	70	14	12,0	8	**TP.. 1103..**
CTFP R/L 1212 F11	12	12	80	14	16,0	8	**TP.. 1103..**
CTFP R/L 2020 K16	20	20	125	28	25,0	8	**TP.. 1603..**
CTFP R/L 2525 M16	25	25	150	32	32,0	8	**TP.. 1603..**

Attention: Right hand holder ➜ Left hand insert / Left hand holder ➜ Right hand insert

Spare Parts

For holder	Clamp	Screw	Support pad	Pin	Spring washer	Key
CT.. R/L.. 11	7830001	7830002	–	–	–	KS 1111
CT.. R/L.. 16	7485869	7480210	7480316	7480901	7480910	KP 1321

1

CTGP R Approach angle 90°

ARNO Kofler

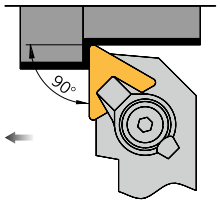

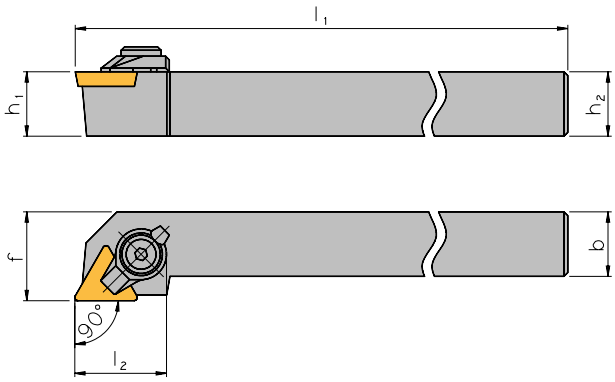

Right hand execution shown

Holder

Designation	h_1 / h_2	b	l_1	l_2	f	PG	Indexable insert
CTGP R 1010 E11	10	10	70	16,5	12,0	8	**TP.. 1103..**
CTGP R 1212 F11	12	12	80	16,5	16,0	8	**TP.. 1103..**

Spare Parts

For holder	Clamp	Screw	Key
CT.. R.. 11	7830001	7830002	KS 1111

MCLC R/L Approach angle 95°

ARNO Kofler

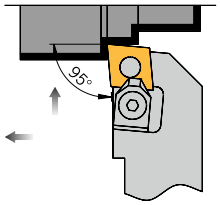

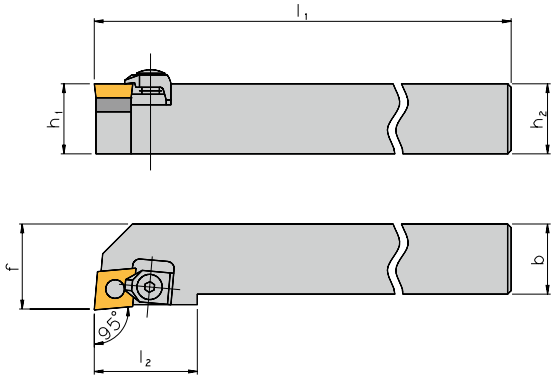

Right hand execution shown

Holder

Designation	h_1 / h_2	b	l_1	l_2	f	PG	Indexable insert
MCLC R/L 2020 K12	20	20	125	35	25,0	8	**CCMX 1204..**
MCLC R/L 2525 M12	25	25	150	35	32,0	8	**CCMX 1204..**

Spare Parts

For holder	Clamp ❶	Wedge	Support pad	Pin	Key
MC.. R/L.. 12	7880603	7880103	7880004	7880402	KS 2520

❶ with screw and lock washer

Dimensions in mm

MSSC R/L Approach angle 45°

ARNO Kofler

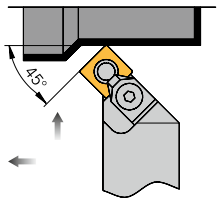

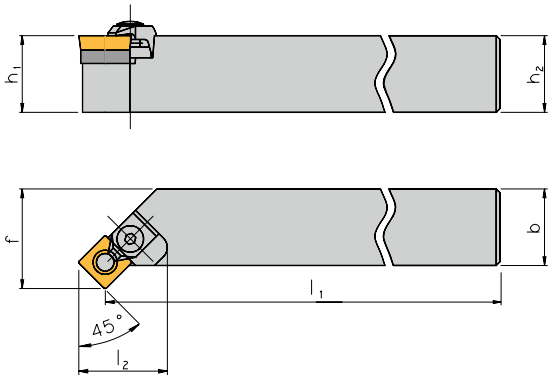

Right hand execution shown

Holder

Designation	h_1 / h_2	b	l_1	l_2	f	PG	Indexable insert
MSSC R/L 2020 K12	20	20	125	32	29,0	8	SCMX 1204..
MSSC R/L 2525 M12	25	25	150	28	32,0	8	SCMX 1204..
MSSC R/L 3225 P12	32	25	180	29	32,5	8	SCMX 1204..

Spare Parts

For holder	Clamp ❶	Wedge	Support pad	Pin	Key
MS.. R/L.. 12	7880603	7880103	7880003	7880402	KS 2520

❶ with screw and lock washer

DCLN R/L Approach angle 95°

ARNO Kofler

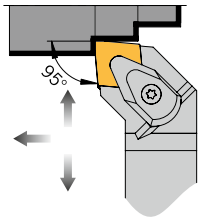

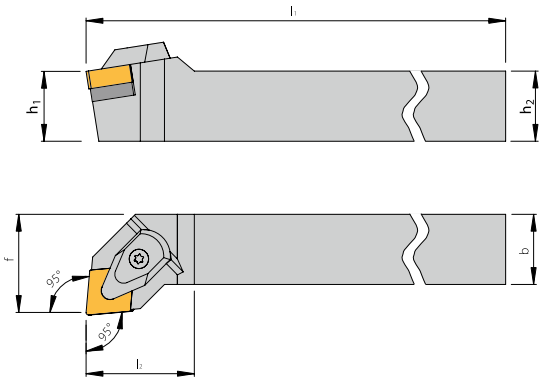

Right hand execution shown

Holder

Designation	h_1 / h_2	b	l_1	l_2	f	PG	Indexable insert
DCLN R/L 2020 K12-A	20	20	125	32	25,0	8	CN.. 1204..
DCLN R/L 2525 M12-A	25	25	150	32	32,0	8	CN.. 1204..
DCLN R/L 2525 M16-A	25	25	150	38	32,0	8	CN.. 1606..
DCLN R/L 3225 P12-A	32	25	170	32	32,0	8	CN.. 1204..
DCLN R/L 3232 P16-A	32	32	170	36	40,0	8	CN.. 1606..
DCLN R/L 3232 P19-A	32	32	170	42	40,0	8	CN.. 1906..
DCLN R/L 4040 S19-A	40	40	250	42	50,0	8	CN.. 1906..

Spare Parts

For holder	Clamp/Spring/Screw	Support pad	Screw for support pad	Key
DC.. R/L.. 12-A	KD 2201	U-CN12T3-D	M4,5x10-T15	KS 1111
DC.. R/L.. 16-A	KD 4420	U-CN1606-D	M5,0x14-T20	KS 2520
DC.. R/L.. 19-A	KD 5530	U-CN1906-D	M5,0x14-T20	KS 2520

1

DDJN R/L Approach angle 93°

ARNO Kofler

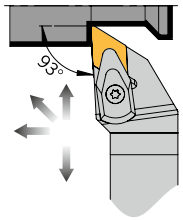

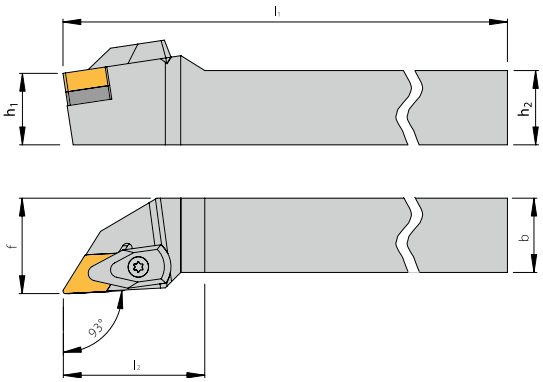

Right hand execution shown

Holder

Designation	h_1 / h_2	b	l_1	l_2	f	PG	Indexable insert
DDJN R/L 2020 K11-A	20	20	125	35	25,0	8	**DN.. 1104..**
DDJN R/L 2020 K15-A	20	20	125	40	25,0	8	**DN.. 1506..**
DDJN R/L 2525 M11-A	25	25	150	35	32,0	8	**DN.. 1104..**
DDJN R/L 2525 M15-A	25	25	150	40	32,0	8	**DN.. 1506..**
DDJN R/L 3225 P15-A	32	25	170	40	32,0	8	**DN.. 1506..**

Spare Parts

For holder	Clamp/Spring/Screw	Support pad	Screw for support pad	Key
DD.. R/L.. 11-A	KD 1105	U-DN1103-D	M3,0x7-T09	KS 2309
DD.. R/L.. 15-A	KD 2201	U-DN15T3-D	M4,5x10-T15	KS 1111

DSBN R/L Approach angle 75°

ARNO Kofler

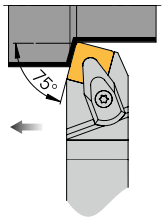

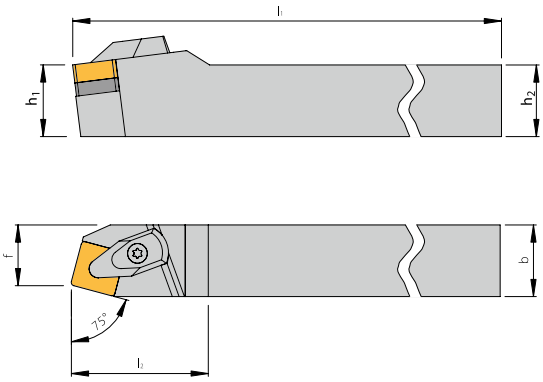

Right hand execution shown

Holder

Designation	h_1 / h_2	b	l_1	l_2	f	PG	Indexable insert
DSBN R/L 2020 K12-A	20	20	125	35	17,0	8	**SN.. 1204..**
DSBN R/L 2525 M12-A	25	25	150	35	22,0	8	**SN.. 1204..**
DSBN R/L 2525 M15-A	25	25	150	42	22,0	8	**SN.. 1506..**
DSBN R/L 3232 P15-A	32	32	170	42	27,0	8	**SN.. 1506..**
DSBN R/L 3232 P19-A	32	32	170	48	27,0	8	**SN.. 1906..**
DSBN R/L 4040 S19-A	40	40	250	48	35,0	8	**SN.. 1906..**

Spare Parts

For holder	Clamp/Spring/Screw	Support pad	Screw for support pad	Key
DS.. R/L.. 12-A	KD 2201	U-SN12T3-D	M4,5x10-T15	KS 1111
DS.. R/L.. 15-A	KD 4420	U-SN1506-D	M5,0x14-T20	KS 2520
DS.. R/L.. 19-A	KD 5530	U-SN1905-D	M5,0x14-T20	KS 2520

Dimensions in mm

DSDN N Approach angle 45°

ARNO Kofler

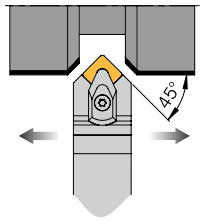

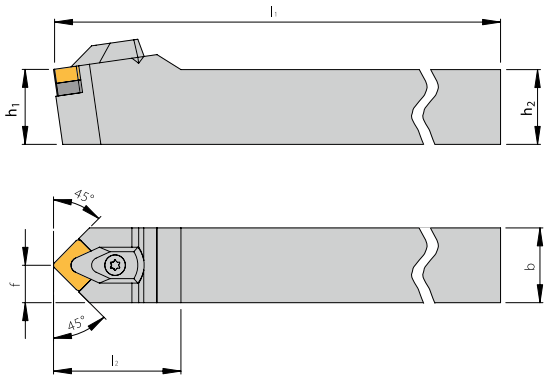

Holder

Designation	h_1 / h_2	b	l_1	l_2	f	PG	Indexable insert
DSDN N 2020 K12-A	20	20	125	38	10,0	8	**SN.. 1204..**
DSDN N 2525 M12-A	25	25	150	38	12,5	8	**SN.. 1204..**

Spare Parts

For holder	Clamp/Spring/Screw	Support pad	Screw for support pad	Key
DS.. N.. 12-A	KD 2201	U-SN12T3-D	M4,5x10-T15	KS 1111

DSKN R/L Approach angle 75°

ARNO Kofler

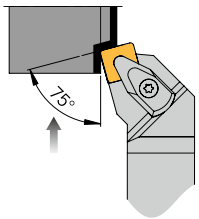

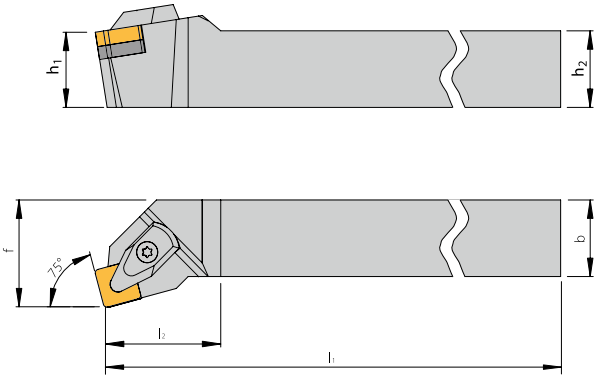

Right hand execution shown

Holder

Designation	h_1 / h_2	b	l_1	l_2	f	PG	Indexable insert
DSKN R/L 2525 M12-A	25	25	150	28	32,0	8	**SN.. 1204..**

Spare Parts

For holder	Clamp/Spring/Screw	Support pad	Screw for support pad	Key
DS.. R/L.. 12-A	KD 2201	U-SN12T3-D	M4,5x10-T15	KS 1111

1

DSSN R/L Approach angle 45°

ARNO Kofler

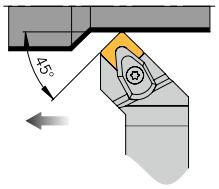

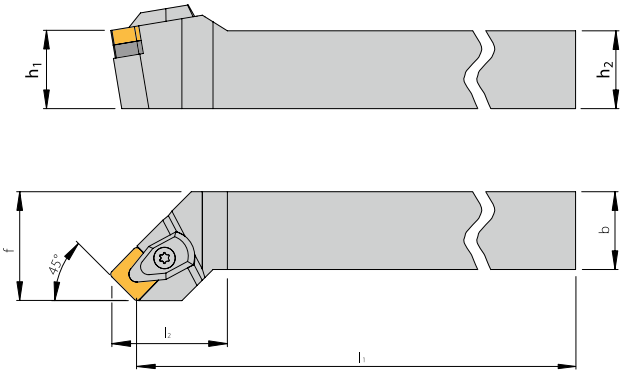

Right hand execution shown

Holder

Designation	h_1 / h_2	b	l_1	l_2	f	PG	Indexable insert
DSSN R/L 2020 K12-A	20	20	125	35	25,0	8	**SN.. 1204..**
DSSN R/L 2525 M12-A	25	25	150	35	32,0	8	**SN.. 1204..**
DSSN R/L 3225 P12-A	32	25	170	35	32,0	8	**SN.. 1204..**

Spare Parts

For holder	Clamp/Spring/Screw	Support pad	Screw for support pad	Key
DS.. R/L.. 12-A	KD 2201	U-SN12T3-D	M4,5x10-T15	KS 1111

DVJN R/L Approach angle 93°

ARNO Kofler

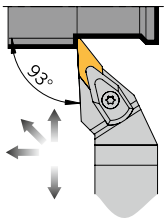

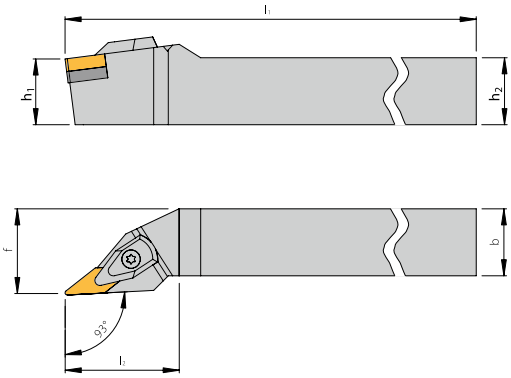

Right hand execution shown

Holder

Designation	h_1 / h_2	b	l_1	l_2	f	PG	Indexable insert
DVJN R/L 2020 K16-A	20	20	125	39	25,0	8	**VN.. 1604..**
DVJN R/L 2525 M16-A	25	25	150	39	32,0	8	**VN.. 1604..**

Spare Parts

For holder	Clamp/Spring/Screw	Support pad	Screw for support pad	Key
DV.. R/L.. 16-A	KD 1105	U-VN1603-D	M3,0x7-T09	KS 2309

DVVN N Approach angle 72,5°

ARNO Kofler

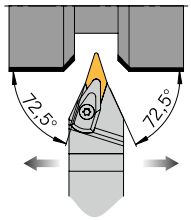

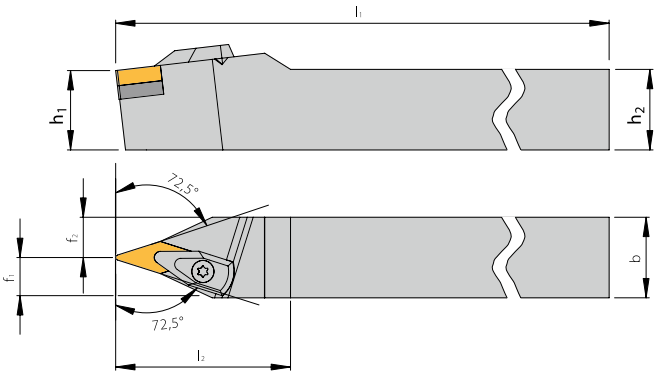

Holder

Designation	h_1 / h_2	b	l_1	l_2	f_1	f_2	PG	Indexable insert
DVVN N 2020 K16-A	20	20	125	43	12,5	7,5	8	**VN.. 1604..**
DVVN N 2525 M16-A	25	25	150	43	12,5	12,5	8	**VN.. 1604..**

Spare Parts

For holder	Clamp/Spring/Screw	Support pad	Screw for support pad	Key
DV.. N.. 16-A	KD 1105	U-VN1603-D	M3,0x7-T09	KS 2309

DWLN R/L Approach angle 95°

ARNO Kofler

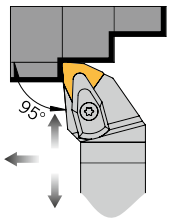

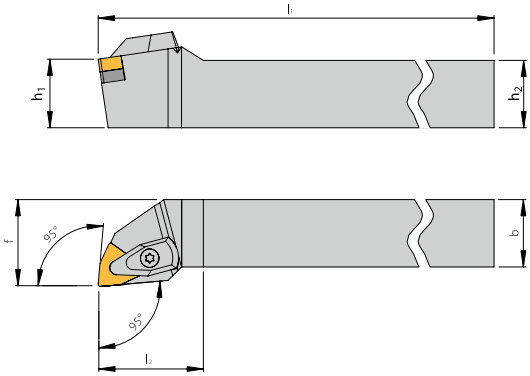

Right hand execution shown

Holder

Designation	h_1 / h_2	b	l_1	l_2	f	PG	Indexable insert
DWLN R/L 2020 K06-A	20	20	125	27	25,0	8	**WN.. 0604..**
DWLN R/L 2020 K08-A	20	20	125	34	25,0	8	**WN.. 0804..**
DWLN R/L 2525 M06-A	25	25	150	27	32,0	8	**WN.. 0604..**
DWLN R/L 2525 M08-A	25	25	150	34	32,0	8	**WN.. 0804..**

Spare Parts

For holder	Clamp/Spring/Screw	Support pad	Screw for support pad	Key
DW.. R/L.. 06-A	KD 1105	U-WN0603-D	M3,0x7-T09	KS 2309
DW.. R/L.. 08-A	KD 2201	U-WN08T3-D	M4,5x10-T15	KS 1111

MTJC R/L Approach angle 93°

ARNO Kofler

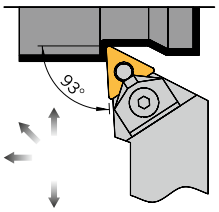

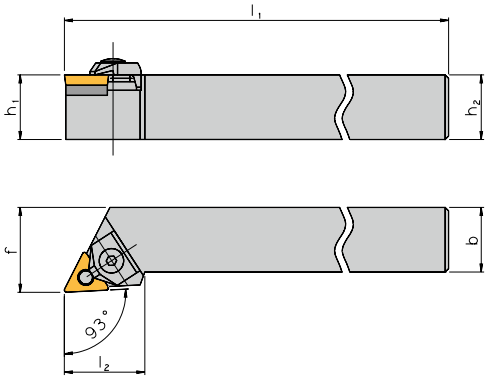

Right hand execution shown

Holder

Designation	h_1 / h_2	b	l_1	l_2	f	PG	Indexable insert
MTJC R/L 2020 K16	20	20	125	32	25,0	8	**TCMX 1604..**
MTJC R/L 2525 M16	25	25	150	32	32,0	8	**TCMX 1604..**
MTJC R/L 2525 M22	25	25	150	35	32,0	8	**TCMX 2204..**

Spare Parts

For holder	Clamp ❶	Wedge	Support pad	Pin	Key
MT.. R/L.. 16	7880601	7880101	7880001	7880401	KS 2520
MT.. R/L.. 22	7880602	7880102	7880002	7880402	KS 2520

❶ with screw and lock washer

Dimensions in mm

PCBN R/L Approach angle 75°

ARNO Kofler

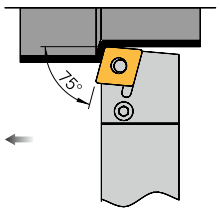

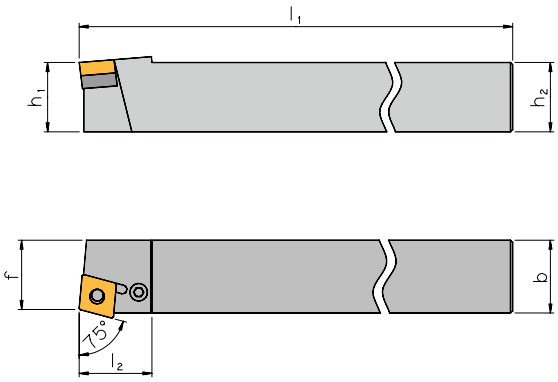

Right hand execution shown

Holder

Designation	h_1 / h_2	b	l_1	l_2	f	PG	Indexable insert
PCBN R/L 2525 M12	25	25	150	27,7	22,0	8	CN.. 1204..
PCBN R/L 2525 M16	25	25	150	31,7	22,0	8	CN.. 1606..
PCBN R/L 3232 P19	32	32	170	37,9	27,0	8	CN.. 1906..

Spare Parts

For holder	1 Support pad	2 Lever	3 Clamping screw	4 Shim pin	Shim pin punch	Key	Spare part set 1-4
PC.. R/L.. 12	UP 1111	HP 1111	SP 1111	RP 1111	MP 1111	KP 1111	P 1111
PC.. R/L.. 16	UP 1221	HP 1221	SP 1221	RP 1221	MP 1221	KP 1111	P 1221
PC.. R/L.. 19	UP 1321	HP 1321	SP 1321	RP 1321	MP 1321	KP 1321	P 1321

PCKN R/L Approach angle 75°

ARNO Kofler

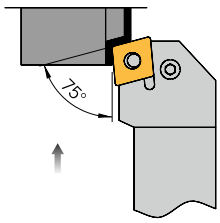

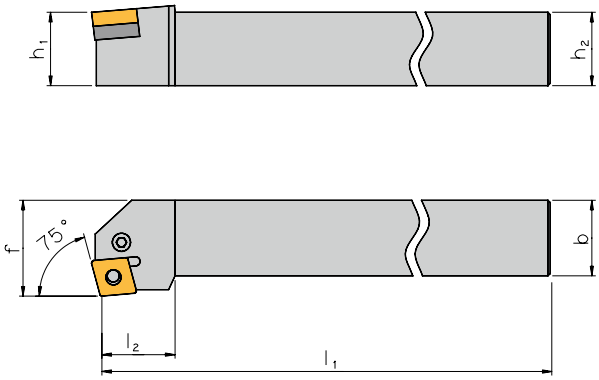

Right hand execution shown

Holder

Designation	h_1 / h_2	b	l_1	l_2	f	PG	Indexable insert
PCKN R/L 2020 K12	20	20	125	27,4	25,0	8	CN.. 1204..
PCKN R/L 2525 M12	25	25	150	28,0	32,0	8	CN.. 1204..
PCKN R/L 3232 P19	32	32	170	36,0	40,0	8	CN.. 1906..

Spare Parts

For holder	1 Support pad	2 Lever	3 Clamping screw	4 Shim pin	Shim pin punch	Key	Spare part set 1-4
PC.. R/L.. 12	UP 1111	HP 1111	SP 1111	RP 1111	MP 1111	KP 1111	P 1111
PC.. R/L.. 19	UP 1321	HP 1321	SP 1321	RP 1321	MP 1321	KP 1321	P 1321

1

PCLN R/L Approach angle 95°

ARNO Kofler

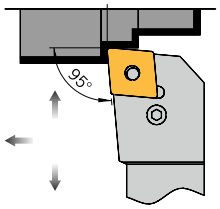

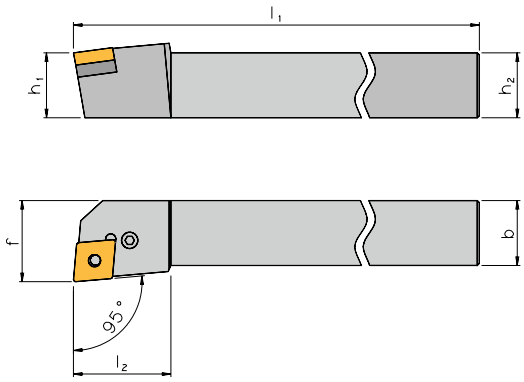

Right hand execution shown

Holder

Designation	h_1 / h_2	b	l_1	l_2	f	PG	Indexable insert
PCLN R/L 1616 H09	16	16	100	23,0	20,0	8	**CN.. 0903..**
PCLN R/L 1616 H12	16	16	100	26,1	20,0	8	**CN.. 1204..**
PCLN R/L 2020 K09	20	20	125	25,0	25,0	8	**CN.. 0903..**
PCLN R/L 2020 K12	20	20	125	27,4	25,0	8	**CN.. 1204..**
PCLN R/L 2525 M09	25	25	150	28,0	32,0	8	**CN.. 0903..**
PCLN R/L 2525 M12	25	25	150	28,0	32,0	8	**CN.. 1204..**
PCLN R/L 2525 M16	25	25	150	28,0	32,0	8	**CN.. 1606..**
PCLN R/L 3225 P12	32	25	170	32,6	32,0	8	**CN.. 1204..**
PCLN R/L 3232 P16	32	32	170	32,6	40,0	8	**CN.. 1606..**
PCLN R/L 3232 P19	32	32	170	38,0	40,0	8	**CN.. 1906..**
PCLN R/L 4040 S19	40	40	250	38,0	50,0	8	**CN.. 1906..**

Spare Parts

For holder	1 Support pad	2 Lever	3 Clamping screw	4 Shim pin	Shim pin punch	Key	Spare part set 1-4
PC.. R/L.. 09	UP 1115	HP 4751	SP 3111	RP 3112	MP 3111	KP 3111	P 1112
PC.. R/L.. 12	UP 1111	HP 1111	SP 1111	RP 1111	MP 1111	KP 1111	P 1111
PC.. R/L.. 16	UP 1221	HP 1221	SP 1221	RP 1221	MP 1221	KP 1111	P 1221
PC.. R/L.. 19	UP 1321	HP 1321	SP 1321	RP 1321	MP 1321	KP 1321	P 1321

Dimensions in mm

PDJN R/L Approach angle 93°

ARNO Kofler

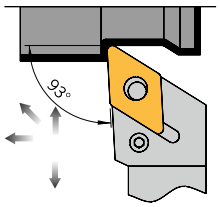

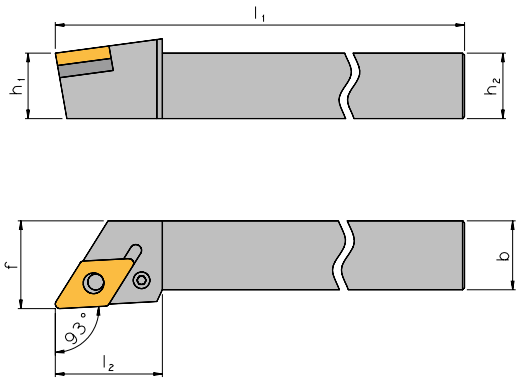

Right hand execution shown

Holder

Designation	h_1 / h_2	b	l_1	l_2	f	PG	Indexable insert
PDJN R/L 1616 H11	16	16	100	30,0	20,0	8	DN.. 1104..
PDJN R/L 2020 K11	20	20	125	30,0	25,0	8	DN.. 1104..
PDJN R/L 2020 K15	20	20	125	34,7	25,0	8	DN.. 1506..
PDJN R/L 2525 M11	25	25	150	30,0	32,0	8	DN.. 1104..
PDJN R/L 2525 M15	25	25	150	34,7	32,0	8	DN.. 1506..
PDJN R/L 3225 P11	32	25	170	30,0	32,0	8	DN.. 1104..
PDJN R/L 3225 P15	32	25	170	34,7	32,0	8	DN.. 1506..
PDJN R/L 3232 P15	32	32	170	34,7	40,0	8	DN.. 1506..

Spare Parts

For holder	1 Support pad	2 Lever	3 Clamping screw	4 Shim pin	Shim pin punch	Key	Spare part set 1-4
PC.. R/L.. 11	UP 2011	HP 2011	SP 3111	RP 3112	MP 3111	KP 3111	P 2011
PC.. R/L.. 15	UP 2421	HP 2421	SP 1111	RP 1111	MP 1111	KP 1111	P 2421

PDNN R/L Approach angle 63°

ARNO Kofler

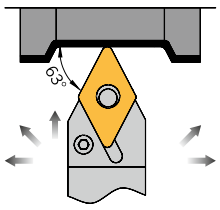

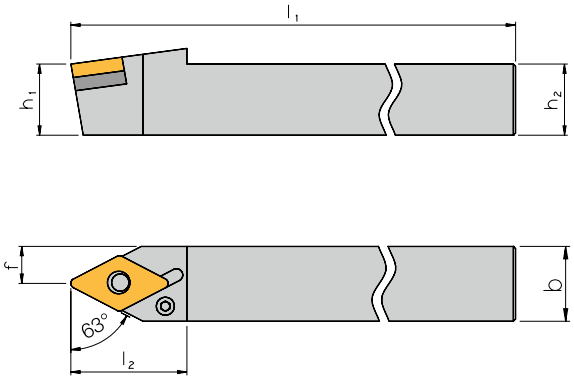

Right hand execution shown

Holder

Designation	h_1 / h_2	b	l_1	l_2	f	PG	Indexable insert
PDNN R/L 2525 M11	25	25	150	30,0	12,5	8	DN.. 1104..
PDNN R/L 2525 M15	25	25	150	36,5	12,5	8	DN.. 1506..
PDNN R/L 4025 P15	40	25	170	36,5	12,5	8	DN.. 1506..

Spare Parts

For holder	1 Support pad	2 Lever	3 Clamping screw	4 Shim pin	Shim pin punch	Key	Spare part set 1-4
PD.. R/L.. 11	UP 2011	HP 2011	SP 3111	RP 3112	MP 3111	KP 3111	P 2011
PD.. R/L.. 15	UP 2421	HP 2421	SP 1111	RP 1111	MP 1111	KP 1111	P 2421

PRDC N

ARNO Kofler

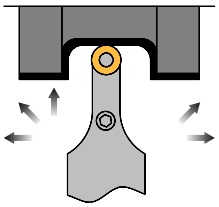

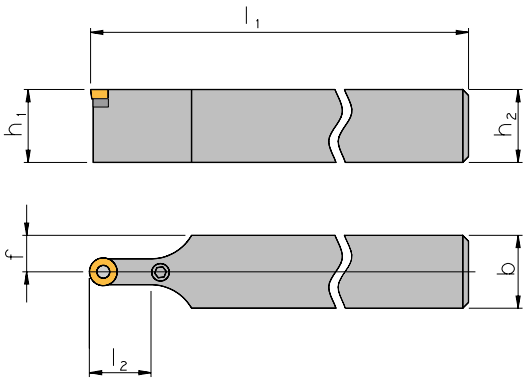

Holder

Designation	h_1 / h_2	b	l_1	l_2	f	PG	Indexable insert
PRDC N 2525 M12	25	25	150	24	12,5	8	**RC.. 1204..**
PRDC N 3225 P12	32	25	170	24	12,5	8	**RC.. 1204..**
PRDC N 3225 P16	32	25	170	28	12,5	8	**RC.. 1606..**
PRDC N 3232 P20	32	32	170	32	16,0	8	**RC.. 2006..**
PRDC N 4040 S25	40	40	250	42	20,0	8	**RC.. 2507..**

Spare Parts

For holder	1 Support pad	2 Lever	3 Clamping screw	4 Shim pin	Shim pin punch	Key	Spare part set 1-4
PR.. N.. 12	UP 3111	HP 3111	SP 3111	RP 3112	MP 3111	KP 3111	P 3111
PR.. N.. 16	UP 3221	HP 3221	SP 3221	RP 3221	MP 1111	KP 1111	P 3221
PR.. N.. 20	UP 3421	HP 3421	SP 3421	RP 1221	MP 1221	KP 3421	P 3421
PR.. N.. 25	UP 3531	HP 3531	SP 3531	RP 1321	MP 1321	KP 1321	P 3531

Dimensions in mm

PRGC R/L

ARNO Kofler

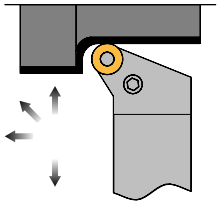

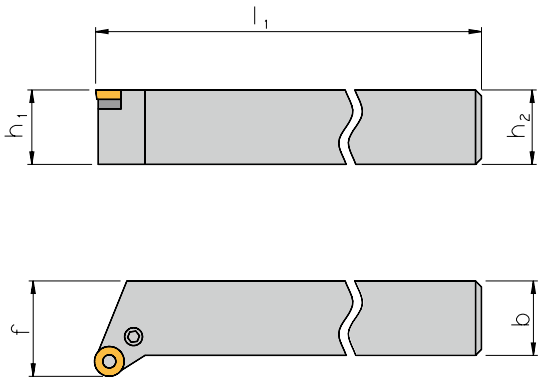

Right hand execution shown

Holder

Designation	h_1 / h_2	b	l_1	f	PG	Indexable insert
PRGC R/L 2525 M12	25	25	150	32,0	8	**RC.. 1204..**
PRGC R/L 3225 P12	32	25	170	32,0	8	**RC.. 1204..**
PRGC R/L 3225 P16	32	25	170	32,0	8	**RC.. 1606..**
PRGC R/L 3232 P16	32	32	170	40,0	8	**RC.. 1606..**
PRGC R/L 3232 P20	32	32	170	40,0	8	**RC.. 2006..**
PRGC R/L 4040 S25	40	40	250	50,0	8	**RC.. 2507..**

Spare Parts

For holder	1 Support pad	2 Lever	3 Clamping screw	4 Shim pin	Shim pin punch	Key	Spare part set 1-4
PRGC.. 12	UP 3111	HP 3111	SP 3111	RP 3112	MP 3111	KP 3111	P 3111
PRGC.. 16	UP 3221	HP 3221	SP 3221	RP 3221	MP 1111	KP 1111	P 3221
PRGC.. 20	UP 3421	HP 3421	SP 3421	RP 1221	MP 1221	KP 3421	P 3421
PRGC.. 25	UP 3531	HP 3531	SP 3531	RP 1321	MP 1321	KP 1321	P 3531

PRGN R/L

ARNO Kofler

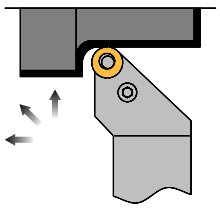

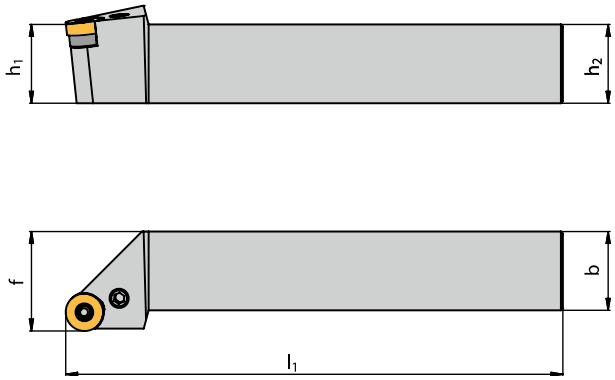

Right hand execution shown

Holder

Designation	h_1 / h_2	b	l_1	f	PG	Indexable insert
PRGN R/L 2020 K09	20	20	125	25,0	8	**RN.. 0903..**
PRGN R/L 2525 M12	25	25	150	32,0	8	**RN.. 1204..**

Spare Parts

For holder	1 Support pad	2 Lever	3 Clamping screw	4 Shim pin	Shim pin punch	Key	Spare part set 1-4
PR.. R/L.. 09	UP 4751	HP 4751	SP 3111	RP 3112	MP 3111	KP 3111	P 4751
PR.. R/L.. 12	UP 4111	HP 4111	SP 1111	RP 1111	MP 1111	KP 1111	P 4111

PSBN R/L Approach angle 75°

ARNO Kofler

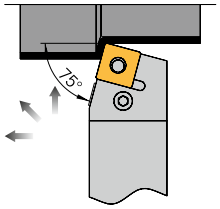

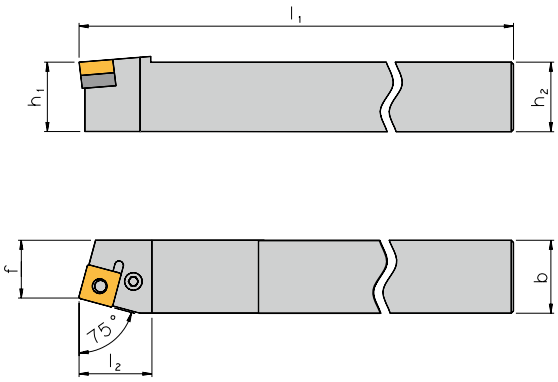

Right hand execution shown

Holder

Designation	h_1 / h_2	b	l_1	l_2	f	PG	Indexable insert
PSBN R/L 2020 K12	20	20	125	27,5	17,0	8	**SN.. 1204..**
PSBN R/L 2525 M12	25	25	150	27,5	22,0	8	**SN.. 1204..**
PSBN R/L 2525 M15	25	25	150	27,5	22,0	8	**SN.. 1506..**
PSBN R/L 3225 P12	32	25	170	32,0	22,0	8	**SN.. 1204..**
PSBN R/L 3232 P15	32	32	170	32,0	27,0	8	**SN.. 1506..**
PSBN R/L 3232 P19	32	32	170	39,2	27,0	8	**SN.. 1906..**
PSBN R/L 4040 S19	40	40	250	38,5	35,0	8	**SN.. 1906..**
PSBN R/L 4040 S25	40	40	250	47,5	35,0	8	**SN.. 2507..**

Spare Parts

For holder	1 Support pad	2 Lever	3 Clamping screw	4 Shim pin	Shim pin punch	Key	Spare part set 1-4
PS.. R/L.. 12	UP 5112	HP 1111	SP 1111	RP 1111	MP 1111	KP 1111	P 5112
PS.. R/L.. 15	UP 5421	HP 1221	SP 1221	RP 1221	MP 1221	KP 1111	P 5421
PS.. R/L.. 19	UP 5321	HP 1321	SP 1321	RP 1321	MP 1321	KP 1321	P 5321
PS.. R/L.. 25	UP 5531	HP 5531	SP 3641	RP 3641	MP 3641	KP 3421	-

PSDN N Approach angle 45°

ARNO Kofler

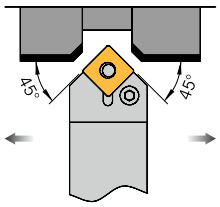

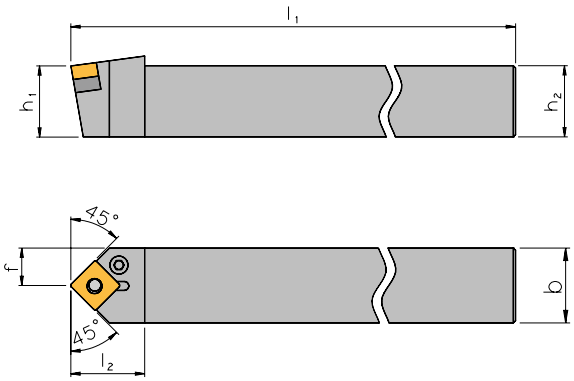

Holder

Designation	h_1 / h_2	b	l_1	l_2	f	PG	Indexable insert
PSDN N 1616 H09	16	16	100	21,0	8,3	8	**SN.. 0903..**
PSDN N 2020 K12	20	20	125	27,6	10,3	8	**SN.. 1204..**
PSDN N 2525 M12	25	25	150	27,6	12,8	8	**SN.. 1204..**
PSDN N 3225 P15	32	25	170	32,0	13,0	8	**SN.. 1506..**
PSDN N 4040 S25	40	40	250	48,8	21,0	8	**SN.. 2509..**

Spare Parts

For holder	1 Support pad	2 Lever	3 Clamping screw	4 Shim pin	Shim pin punch	Key	Spare part set 1-4
PS.. N..09	UP 5751	HP 4751	SP 3111	RP 3112	MP 3111	KP 3111	P 5751
PS.. N..12	UP 5112	HP 1111	SP 1111	RP 1111	MP 1111	KP 1111	P 5112
PS.. N..15	UP 5421	HP 1221	SP 1221	RP 1221	MP 1221	KP 1111	P 5421
PS.. N..25	UP 5531	HP 5531	SP 3641	RP 3641	MP 3641	KP 3421	–

1

PSKN R/L Approach angle 75°

ARNO Kofler

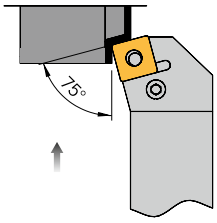

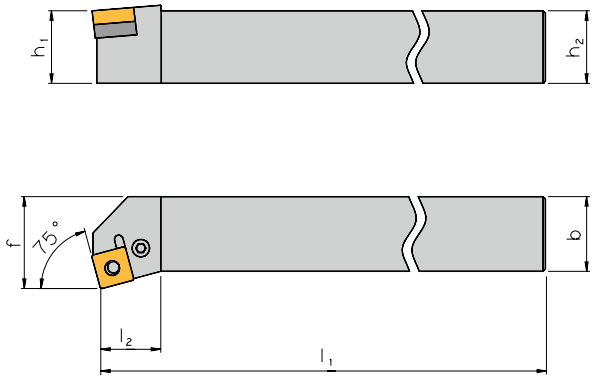

Right hand execution shown

Holder

Designation	h_1 / h_2	b	l_1	l_2	f	PG	Indexable insert
PSKN R/L 1616 H09	16	16	100	18,7	20,0	8	**SN.. 0903..**
PSKN R/L 2020 K12	20	20	125	22,7	25,0	8	**SN.. 1204..**
PSKN R/L 2525 M12	25	25	150	22,7	32,0	8	**SN.. 1204..**
PSKN R/L 2525 M15	25	25	150	22,7	32,0	8	**SN.. 1506..**
PSKN R/L 3225 P12	32	25	170	32,0	32,0	8	**SN.. 1204..**
PSKN R/L 3232 P15	32	32	170	32,0	40,0	8	**SN.. 1506..**
PSKN R/L 3232 P19	32	32	170	33,7	40,0	8	**SN.. 1906..**
PSKN R/L 4040 S19	40	40	250	37,6	50,0	8	**SN.. 1906..**

Spare Parts

For holder	1 Support pad	2 Lever	3 Clamping screw	4 Shim pin	Shim pin punch	Key	Spare part set 1-4
PS.. R/L.. 09	UP 5751	HP 4751	SP 3111	RP 3112	MP 3111	KP 3111	P 5751
PS.. R/L.. 12	UP 5112	HP 1111	SP 1111	RP 1111	MP 1111	KP 1111	P 5112
PS.. R/L.. 15	UP 5421	HP 1221	SP 1221	RP 1221	MP 1221	KP 1111	P 5421
PS.. R/L.. 19	UP 5321	HP 1321	SP 1321	RP 1321	MP 1321	KP 1321	P 5321

Dimensions in mm

PSSN R/L Approach angle 45°

ARNO Kofler

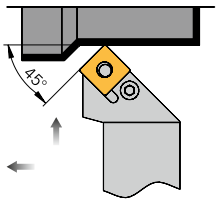

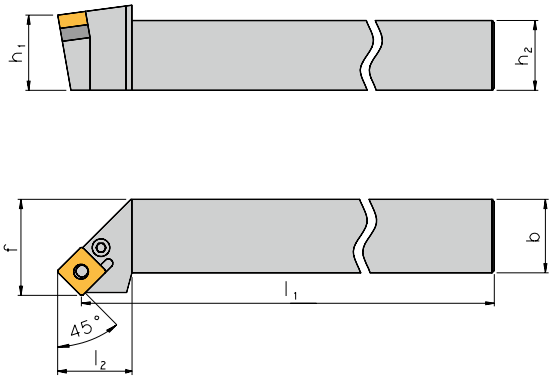

Right hand execution shown

Holder

Designation	h_1 / h_2	b	l_1	l_2	f	PG	Indexable insert
PSSN R/L 1616 H09	16	16	100	21,2	20,0	8	**SN.. 0903..**
PSSN R/L 2020 K12	20	20	125	29,3	25,0	8	**SN.. 1204..**
PSSN R/L 2525 M12	25	25	150	29,3	32,0	8	**SN.. 1204..**
PSSN R/L 2525 M15	25	25	150	29,3	32,0	8	**SN.. 1506..**
PSSN R/L 3225 P12	32	25	170	32,0	32,0	8	**SN.. 1204..**
PSSN R/L 3232 P15	32	32	170	32,0	40,0	8	**SN.. 1506..**
PSSN R/L 3232 P19	32	32	170	40,2	40,0	8	**SN.. 1906..**
PSSN L 4040 S19	40	40	250	39,5	50,0	8	**SN.. 1906..**
PSSN R/L 4040 S25	40	40	250	53,0	50,0	8	**SN.. 2509..**

Spare Parts

For holder	1 Support pad	2 Lever	3 Clamping screw	4 Shim pin	Shim pin punch	Key	Spare part set 1-4
PS.. R/L.. 09	UP 5751	HP 4751	SP 3111	RP 3112	MP 3111	KP 3111	P 5751
PS.. R/L.. 12	UP 5112	HP 1111	SP 1111	RP 1111	MP 1111	KP 1111	P 5112
PS.. R/L.. 15	UP 5421	HP 1221	SP 1221	RP 1221	MP 1221	KP 1111	P 5421
PS.. R/L.. 19	UP 5321	HP 1321	SP 1321	RP 1321	MP 1321	KP 1321	P 5321
PS.. R/L.. 25	UP 5531	HP 5531	SP 3641	RP 3641	MP 3641	KP 3421	-

1

PTFN R/L Approach angle 90°

ARNO Kofler

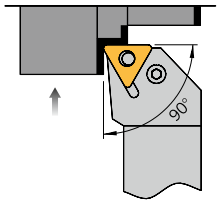

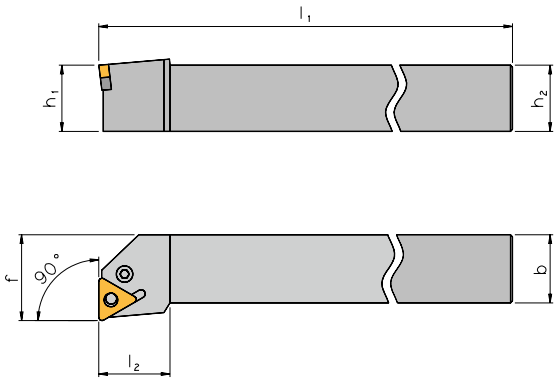

Right hand execution shown

Holder

Designation	h_1 / h_2	b	l_1	l_2	f	PG	Indexable insert
PTFN R/L 1616 H16	16	16	100	19,7	20,0	8	**TN.. 1604..**
PTFN R/L 2020 K16	20	20	125	20,2	25,0	8	**TN.. 1604..**
PTFN R/L 2525 M16	25	25	150	20,2	32,0	8	**TN.. 1604..**
PTFN R/L 2525 M22	25	25	150	25,2	32,0	8	**TN.. 2204..**
PTFN R/L 3225 P22	32	25	170	25,2	32,0	8	**TN.. 2204..**

Spare Parts

For holder	1 Support pad	2 Lever	3 Clamping screw	4 Shim pin	Shim pin punch	Key	Spare part set 1-4
PT.. R/L.. 16	UP 6211	HP 4751	SP 3111	RP 3112	MP 3111	KP 3111	P 6211
PT.. R/L.. 22	UP 6811	HP 1111	SP 1111	RP 1111	MP 1111	KP 1111	P 6811

PTGN R/L Approach angle 90°

ARNO Kofler

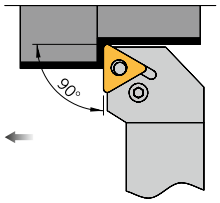

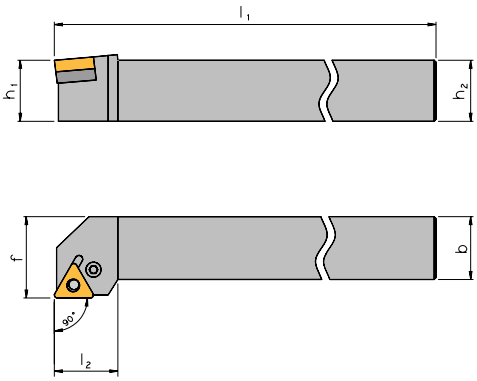

Right hand execution shown

Holder

Designation	h_1 / h_2	b	l_1	l_2	f	PG	Indexable insert
PTGN R/L 1616 H16	16	16	100	20,0	20,0	8	**TN.. 1604..**
PTGN R/L 2020 K16	20	20	125	20,0	25,0	8	**TN.. 1604..**
PTGN R/L 2525 M16	25	25	150	22,2	32,0	8	**TN.. 1604..**
PTGN R/L 2525 M22	25	25	150	28,7	32,0	8	**TN.. 2204..**
PTGN R/L 3225 P16	32	25	170	22,2	32,0	8	**TN.. 1604..**
PTGN R/L 3232 P22	32	32	170	28,7	40,0	8	**TN.. 2204..**
PTGN R/L 4040 S27	40	40	250	34,0	50,0	8	**TN.. 2706..**

Spare Parts

For holder	1 Support pad	2 Lever	3 Clamping screw	4 Shim pin	Shim pin punch	Key	Spare part set 1-4
PT.. R/L.. 16	UP 6211	HP 4751	SP 3111	RP 3112	MP 3111	KP 3111	P 6211
PT.. R/L.. 22	UP 6811	HP 1111	SP 1111	RP 1111	MP 1111	KP 1111	P 6811
PT.. R/L.. 27	UP 6921	HP 6921	SP 1221	RP 1221	MP 1221	KP 1111	–

PTTN R/L Approach angle 60°

ARNO Kofler

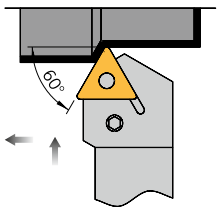

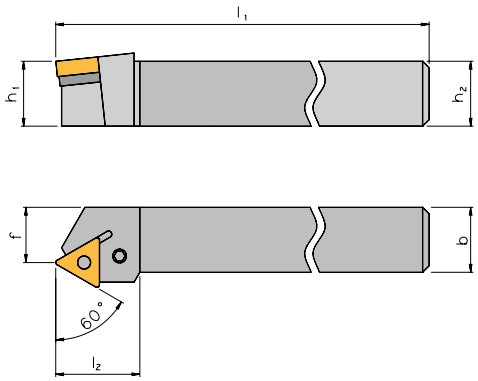

Right hand execution shown

Holder

Designation	h_1 / h_2	b	l_1	l_2	f	PG	Indexable insert
PTTN R/L 2020 K16	20	20	125	25,9	17,0	8	**TN.. 1604..**
PTTN R/L 2525 M22	25	25	150	31,9	22,0	8	**TN.. 2204..**

Spare Parts

For holder	1 Support pad	2 Lever	3 Clamping screw	4 Shim pin	Shim pin punch	Key	Spare part set 1-4
PT.. R/L.. 16	UP 6211	HP 4751	SP 3111	RP 3112	MP 3111	KP 3111	P 6211
PT.. R/L.. 22	UP 6811	HP 1111	SP 1111	RP 1111	MP 1111	KP 1111	P 6811

PWLN R/L Approach angle 95°

ARNO Kofler

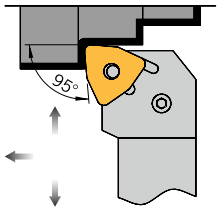

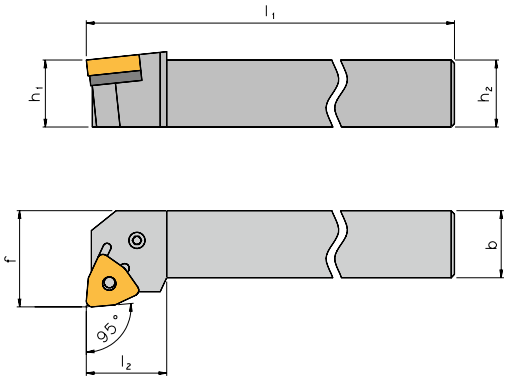

Right hand execution shown

Holder

Designation	h_1 / h_2	b	l_1	l_2	f	PG	Indexable insert
PWLN R/L 1616 H06	16	16	100	20	20,0	8	**WN.. 0604..**
PWLN R/L 2020 K06	20	20	125	25	25,0	8	**WN.. 0604..**
PWLN R/L 2020 K08	20	20	125	25	25,0	8	**WN.. 0804..**
PWLN R/L 2525 M06	25	25	150	25	32,0	8	**WN.. 0604..**
PWLN R/L 2525 M08	25	25	150	25	32,0	8	**WN.. 0804..**
PWLN R/L 3225 P08	32	25	170	25	32,0	8	**WN.. 0804..**

Spare Parts

For holder	1 Support pad	2 Lever	3 Clamping screw	4 Shim pin	Shim pin punch	Key	Spare part set 1-4
PW.. R/L.. 06	UP 71111	HP 4751	SP 3111	RP 3112	MP 3111	KP 3111	P 71112
PW.. R/L.. 08	UP 71011	HP 1111	SP 1111	RP 1111	MP 1111	KP 1111	P 71011

1

SCAC R/L Approach angle 90°

ARNO Kofler

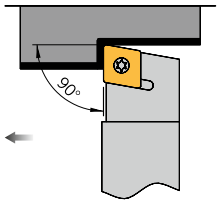

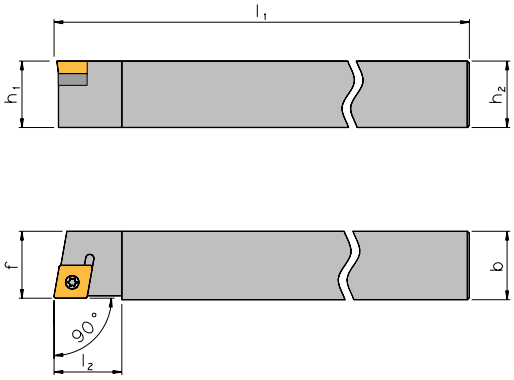

Right hand execution shown

Holder

Designation	h_1 / h_2	b	l_1	l_2	f	PG	Indexable insert
SCAC R/L 0808 D06	8	8	60	9	8,0	8	**CC.. 0602..**
SCAC R/L 0808 K06	8	8	125	9	8,0	8	**CC.. 0602..**
SCAC R/L 1010 E06	10	10	70	9	10,0	8	**CC.. 0602..**
SCAC R/L 1010 M06	10	10	150	9	10,0	8	**CC.. 0602..**
SCAC R/L 1212 F09	12	12	80	13	12,0	8	**CC.. 09T3..**
SCAC R/L 1212 M09	12	12	150	13	12,0	8	**CC.. 09T3..**
SCAC R/L 1414 M09	14	14	150	13	14,0	8	**CC.. 09T3..**
SCAC R/L 1616 H09	16	16	100	13	16,0	8	**CC.. 09T3..**
SCAC R/L 2020 K12	20	20	125	17	20,0	8	**CC.. 1204..**

Spare Parts

For holder	Support pad	Bushing	Screw	Key	Spare part set ❹
SC.. R/L.. 06	–	–	SS 1751	KS 1751	S 1751
SC.. R/L.. 1212-1414.. 09	–	–	SS 1111	KS 1111	S 1111
SC.. R/L.. 1616.. 09	US 1111	GBS 1111	SS 1111	KS 1115	S 1116
SC.. R/L.. 12	US 1221	GBS 1221	SS 1221	KS 1115	S 1221

❹ Spare part set consists of: 3 screws + 1 key. Depending on type of toolholder also 1 support pad + 1 bushing

Dimensions in mm

SCAC R/L Approach angle 90°

CNC Auto Lathe

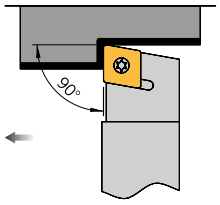

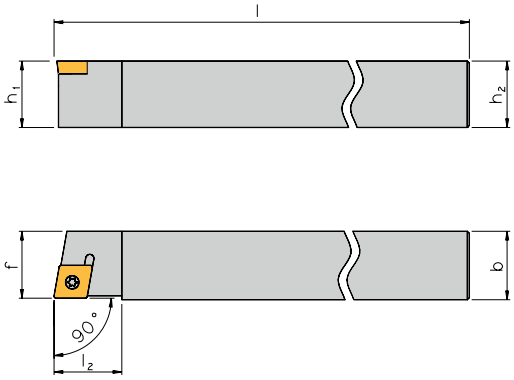

Right hand execution shown

Holder

Designation	h_1 / h_2	b	l	f	PG	Indexable insert
SCAC R/L 0808 X06-A	8	8	115	8,0	39	CC.. 0602..
SCAC R/L 1010 X06-A	10	10	115	10,0	39	CC.. 0602..
SCAC R/L 1212 X06-A	12	12	130	12,0	39	CC.. 0602..
SCAC R/L 1212 X09-A	12	12	130	12,0	39	CC.. 09T3..
SCAC R/L 1616 X09-A	16	16	130	16,0	39	CC.. 09T3..
SCAC R/L 2020 X09-A	20	20	120	20,0	39	CC.. 09T3..

Spare Parts

For holder	Screw	Key
SCAC R/L.. X06-A	SS 1751	KS 1751
SCAC R/L.. X09-A	V-M4-2200	KS 1111

Remark: All flats are ground

SCAP R/L Approach angle 90°

ARNO Kofler

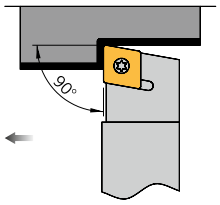

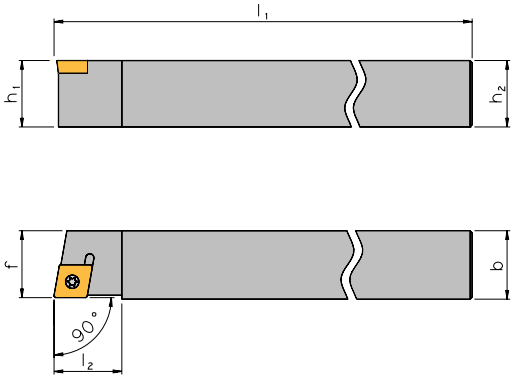

Right hand execution shown

Holder

Designation	h_1 / h_2	b	l_1	l_2	f	PG	Indexable insert
SCAP R/L 0808 K05	8	8	125	10	8,5	8	CP.. 05T1..
SCAP R/L 1010 M05	10	10	150	10	10,5	8	CP.. 05T1..
SCAP R/L 1212 M05	12	12	150	12	12,5	8	CP.. 05T1..

Spare Parts

For holder	Screw	Key
SC.. R/L.. 05	T 2,2.04	KS 5151

Dimensions in mm

1

SCDC L Approach angle 45°

ARNO Kofler

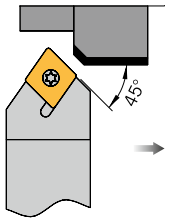

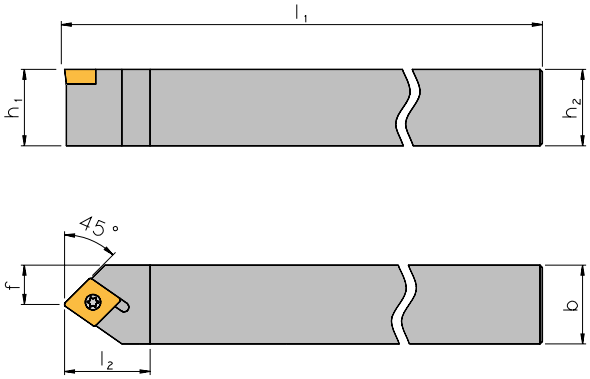

Left hand execution shown

Holder

Designation	h_1 / h_2	b	l_1	l_2	f	PG	Indexable insert
SCDC L 0808 K06	8	8	125	13	4,0	**8**	**CC.. 0602..**
SCDC L 1010 M06	10	10	150	13	5,0	**8**	**CC.. 0602..**
SCDC L 1212 M09	12	12	150	18	6,0	**8**	**CC.. 09T3..**
SCDC L 1414 M09	14	14	150	18	7,0	**8**	**CC.. 09T3..**

Spare Parts

For holder	Screw	Key	Spare part set ❹
SC.. L.. 06	SS 1751	KS 1751	S 1751
SC.. L.. 09	SS 1111	KS 1111	S 1111

❹ Spare part set consists of: 3 screws + 1 key

Dimensions in mm

SCFC R/L Approach angle 90°

ARNO Kofler

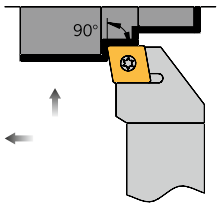

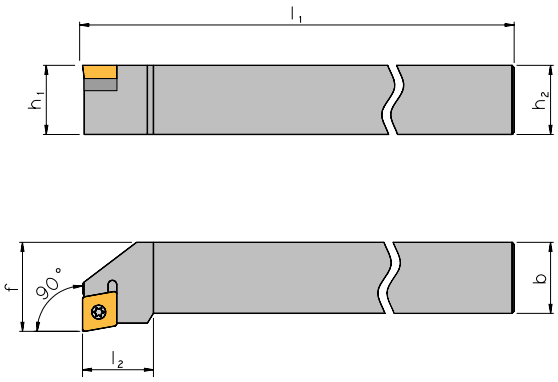

Right hand execution shown

Holder

Designation	h_1 / h_2	b	l_1	l_2	f	PG	Indexable insert
SCFC R/L 0808 D06	8	8	60	10	10,0	8	**CC.. 0602..**
SCFC R/L 1010 E06	10	10	70	10	12,0	8	**CC.. 0602..**
SCFC R/L 1212 F09	12	12	80	13	16,0	8	**CC.. 09T3..**
SCFC R/L 1616 H09	16	16	100	13	20,0	8	**CC.. 09T3..**
SCFC R/L 2020 K12	20	20	125	17	25,0	8	**CC.. 1204..**

Spare Parts

For holder	Support pad	Bushing	Screw	Key	Spare part set ❹
SC.. R/L.. 06	–	–	SS 1751	KS 1751	S 1751
SC.. R/L.. 1212.. 09	–	–	SS 1111	KS 1111	S 1111
SC.. R/L.. 1616.. 09	US 1111	GBS 1111	SS 1111	KS 1115	S 1116
SC.. R/L.. 12	US 1221	GBS 1221	SS 1221	KS 1115	S 1221

❹ Spare part set consists of: 3 screws + 1 key. Depending on type of toolholder also 1 support pad + 1 bushing

1

SCLC R/L Approach angle 95°

ARNO Kofler

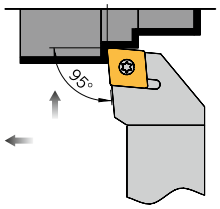

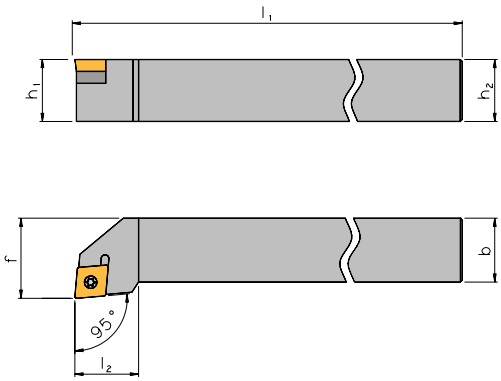

Right hand execution shown

Holder

Designation	h_1 / h_2	b	l_1	l_2	f	PG	Indexable insert
SCLC R/L 0808 D06	8	8	60	9	10,0	8	CC.. 0602..
SCLC R/L 1010 E06	10	10	70	9	12,0	8	CC.. 0602..
SCLC R/L 1212 F09	12	12	80	15	16,0	8	CC.. 09T3..
SCLC R/L 1616 H09	16	16	100	17	20,0	8	CC.. 09T3..
SCLC R/L 1616 H12	16	16	100	20	20,0	8	CC.. 1204..
SCLC R/L 2020 K09	20	20	125	17	25,0	8	CC.. 09T3..
SCLC R/L 2020 K12	20	20	125	20	25,0	8	CC.. 1204..
SCLC R/L 2525 M12	25	25	150	20	32,0	8	CC.. 1204..
SCLC R/L 3225 P12	32	25	170	20	32,0	8	CC.. 1204..

Spare Parts

For holder	Support pad	Bushing	Screw	Key	Spare part set ❹
SC.. R/L.. 06	–	–	SS 1751	KS 1751	S 1751
SC.. R/L.. 1212.. 09	–	–	SS 1111	KS 1111	S 1111
SC.. R/L.. 1616-2020.. 09	US 1111	GBS 1111	SS 1111	KS 1115	S 1116
SC.. R/L.. 12	US 1221	GBS 1221	SS 1221	KS 1115	S 1221

❹ Spare part set consists of: 3 screws + 1 key. Depending on type of toolholder also 1 support pad + 1 bushing

Dimensions in mm

SCLC R/L Approach angle 95°

CNC Auto Lathe

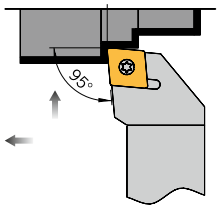

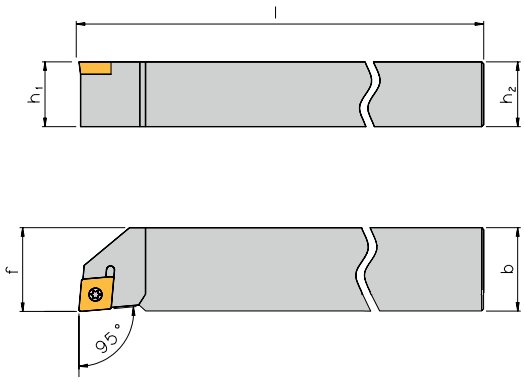

Right hand execution shown

Holder

Designation	h_1 / h_2	b	l	f	PG	Indexable insert
SCLC R/L 0808 X06-A	8	8	115	8,0	39	CC.. 0602..
SCLC R/L 1010 X06-A	10	10	115	10,0	39	CC.. 0602..
SCLC R/L 1212 X06-A	12	12	130	12,0	39	CC.. 0602..
SCLC R/L 1212 X09-A	12	12	130	12,0	39	CC.. 09T3..
SCLC R/L 1616 X06-A	16	16	130	16,0	39	CC.. 0602..
SCLC R/L 1616 X09-A	16	16	130	16,0	39	CC.. 09T3..
SCLC R/L 2020 X09-A	20	20	120	20,0	39	CC.. 09T3..

Spare Parts

For holder	Screw	Key
SCLC R/L.. X06-A	SS 1751	KS 1751
SCLC R/L.. X09-A	V-M4-2200	KS 1111

Remark: All flats are ground

SCLP R/L Approach angle 95°

ARNO Kofler

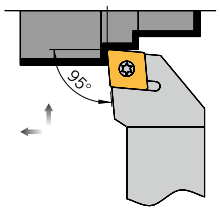

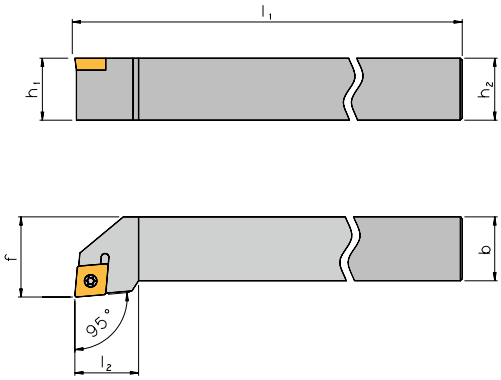

Right hand execution shown

Holder

Designation	h_1 / h_2	b	l_1	l_2	f	PG	Indexable insert
SCLP R/L 0808 D05	8	8	60	10	10,0	8	CP.. 05T1..
SCLP R/L 1010 E05	10	10	70	10	12,0	8	CP.. 05T1..
SCLP R/L 1212 F05	12	12	80	12	16,0	8	CP.. 05T1..

Spare Parts

For holder	Screw	Key
SC.. R/L.. 05	T 2,2.04	KS 5151

1

SCMC N Approach angle 50°

ARNO Kofler

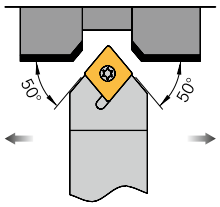

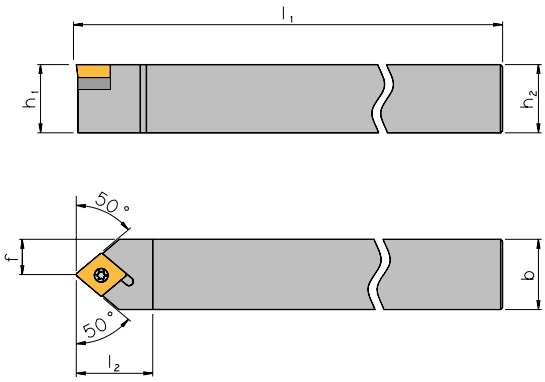

Holder

Designation	h_1 / h_2	b	l_1	l_2	f	PG	Indexable insert
SCMC N 1616 H12	16	16	100	25	8,0	8	CC.. 1204..
SCMC N 2020 K12	20	20	125	25	10,0	8	CC.. 1204..
SCMC N 2525 M12	25	25	150	25	12,5	8	CC.. 1204..
SCMC N 3225 P12	32	25	170	25	12,5	8	CC.. 1204..

Spare Parts

For holder	Support pad	Bushing	Screw	Key	Spare part set ❹
SC.. N.. 12	US 1221	GBS 1221	SS 1221	KS 1115	S 1221

❹ Spare part set consists of: 3 screws + 1 key. Depending on type of toolholder also 1 support pad + 1 bushing

SCMC N Approach angle 50°

CNC Auto Lathe

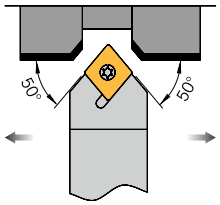

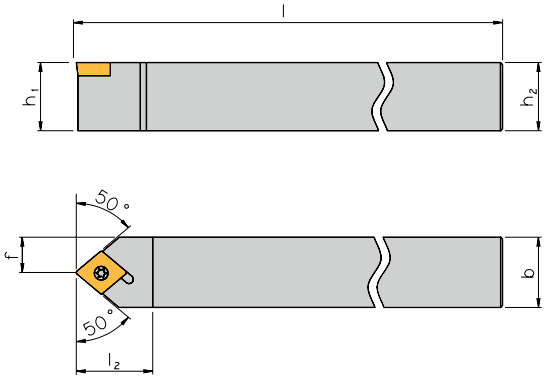

Holder

Designation	h_1 / h_2	b	l	f	PG	Indexable insert
SCMC N 0808 X06-A	8	8	115	4,0	39	CC.. 0602..
SCMC N 1010 X06-A	10	10	115	5,0	39	CC.. 0602..
SCMC N 1212 X06-A	12	12	130	6,0	39	CC.. 0602..
SCMC N 1212 X09-A	12	12	130	6,0	39	CC.. 09T3..
SCMC N 1616 X09-A	16	16	130	8,0	39	CC.. 09T3..
SCMC N 2020 X09-A	20	20	120	10,0	39	CC.. 09T3..

Spare Parts

For holder	Screw	Key
SCMC N.. X06-A	SS 1751	KS 1751
SCMC N.. X09-A	V-M4-2200	KS 1111

Remark: All flats are ground

Dimensions in mm

SCRC R/L Approach angle 75°

ARNO Kofler

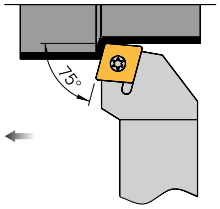

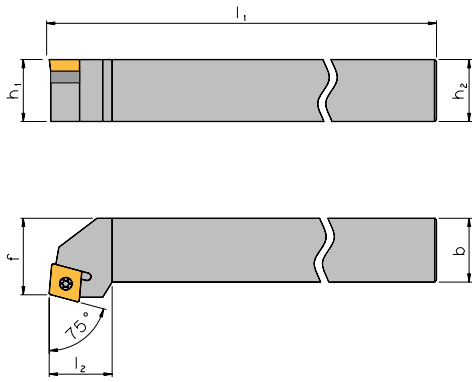

Right hand execution shown

Holder

Designation	h_1 / h_2	b	l_1	l_2	f	PG	Indexable insert
SCRC R/L 0808 D06	8	8	60	10	9,0	8	**CC.. 0602..**
SCRC R/L 1010 E06	10	10	70	10	11,0	8	**CC.. 0602..**
SCRC R/L 1212 F09	12	12	80	16	13,0	8	**CC.. 09T3..**
SCRC R/L 1616 H09	16	16	100	17	17,0	8	**CC.. 09T3..**
SCRC R/L 1616 H12	16	16	100	20	17,0	8	**CC.. 1204..**
SCRC R/L 2020 K09	20	20	125	17	22,0	8	**CC.. 09T3..**
SCRC R/L 2020 K12	20	20	125	20	22,0	8	**CC.. 1204..**
SCRC R/L 2525 M12	25	25	150	20	27,0	8	**CC.. 1204..**
SCRC R/L 3225 P12	32	25	170	20	27,0	8	**CC.. 1204..**

Spare Parts

For holder	Support pad	Bushing	Screw	Key	Spare part set ❹
SC.. R/L.. 06	–	–	SS 1751	KS 1751	S 1751
SC.. R/L.. 1212.. 09	–	–	SS 1111	KS 1111	S 1111
SC.. R/L.. 1616-2020.. 09	US 1111	GBS 1111	SS 1111	KS 1115	S 1116
SC.. R/L.. 12	US 1221	GBS 1221	SS 1221	KS 1115	S 1221

❹ Spare part set consists of: 3 screws + 1 key. Depending on type of toolholder also 1 support pad + 1 bushing.

1

SCSC R/L Approach angle 45°

ARNO Kofler

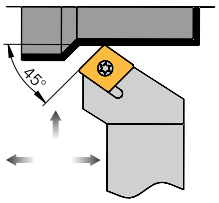

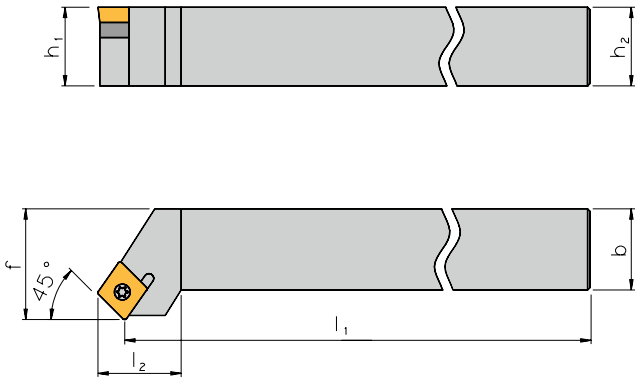

Right hand execution shown

Holder

Designation	h_1 / h_2	b	l_1	l_2	f	PG	Indexable insert
SCSC R/L 1616 H12	16	16	100	20	20,0	8	**CC.. 1204..**
SCSC R/L 2020 K12	20	20	125	20	25,0	8	**CC.. 1204..**
SCSC R/L 2525 M12	25	25	150	20	32,0	8	**CC.. 1204..**
SCSC R/L 3225 P12	32	25	170	20	32,0	8	**CC.. 1204..**

Spare Parts

For holder	Support pad	Bushing	Screw	Key	Spare part set ❹
SC.. R/L.. 12	US 1221	GBS 1221	SS 1221	KS 1115	S 1221

❹ Spare part set consists of: 3 screws + 1 key. Depending on type of toolholder also 1 support pad + 1 bushing

SCXP N Approach angle 40°

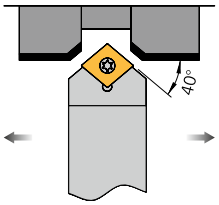

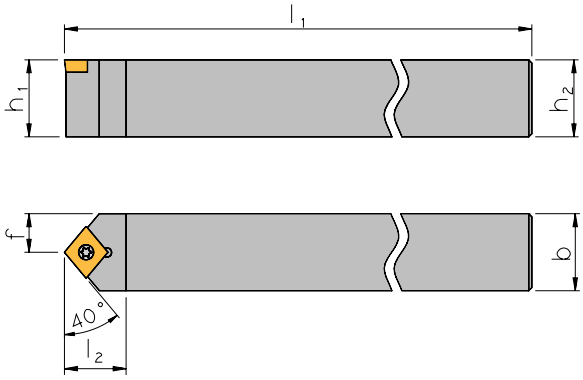

Holder

Designation	h_1 / h_2	b	l_1	l_2	f	PG	Indexable insert
SCXP N 0808 K05	8	8	125	12	4,0	8	**CP.. 05T1..**
SCXP N 1010 M05	10	10	150	12	5,0	8	**CP.. 05T1..**
SCXP N 1212 M05	12	12	150	12	6,0	8	**CP.. 05T1..**

Spare Parts

For holder	Screw	Key
SC.. N.. 05	T 2,2.04	KS 5151

SDAC R/L Approach angle 90°

ARNO Kofler

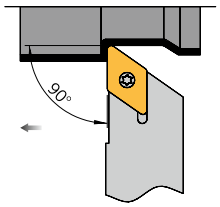

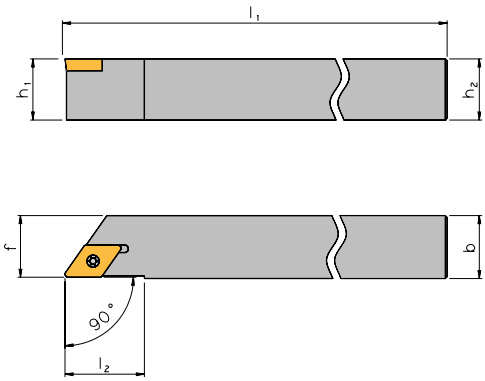

Right hand execution shown

Holder

Designation	h_1 / h_2	b	l_1	l_2	f	PG	Indexable insert
SDAC R/L 0808 K07	8	8	125	14	8,0	8	**DC.. 0702..**
SDAC R/L 1010 M07	10	10	150	14	10,0	8	**DC.. 0702..**
SDAC R/L 1212 M07	12	12	150	14	12,0	8	**DC.. 0702..**
SDAC R/L 1212 M11	12	12	150	14	12,0	8	**DC.. 11T3..**
SDAC R/L 1414 M11	14	14	150	21	14,0	8	**DC.. 11T3..**

Spare Parts

For holder	Screw	Key	Spare part set ❹
SD.. R/L.. 07	SS 1751	KS 1751	S 1751
SD.. R/L.. 11	SS 1111	KS 1111	S 1111

❹ Spare part set consists of: 3 screws + 1 key

SDAC R/L Approach angle 90°

CNC Auto Lathe

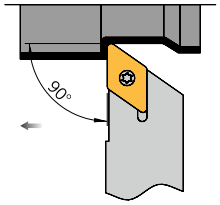

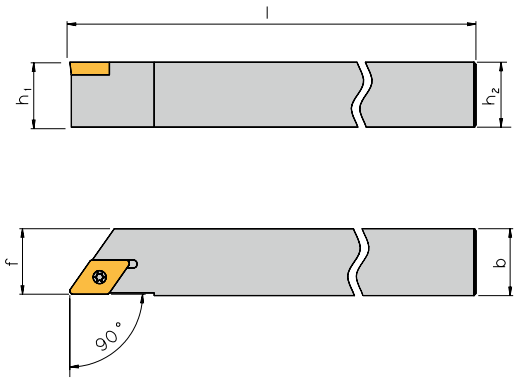

Right hand execution shown

Holder

Designation	h_1 / h_2	b	l	f	PG	Indexable insert
SDAC R/L 0808 X07-A	8	8	115	8,0	39	**DC.. 0702..**
SDAC R/L 1010 X07-A	10	10	115	10,0	39	**DC.. 0702..**
SDAC R/L 1212 X07-A	12	12	130	12,0	39	**DC.. 0702..**
SDAC R/L 1212 X11-A	12	12	130	12,0	39	**DC.. 11T3..**
SDAC R/L 1616 X07-A	16	16	130	16,0	39	**DC.. 0702..**
SDAC R/L 1616 X11-A	16	16	130	16,0	39	**DC.. 11T3..**
SDAC R/L 2020 X11-A	20	20	120	20,0	39	**DC.. 11T3..**

Spare Parts

For holder	Screw	Key
SDAC R/L.. X07-A	SS 1751	KS 1751
SDAC R/L.. X11-A	V-M4-2400	KS 1111

Remark: All flats are ground

Dimensions in mm

SDHC R/L Approach angle 107,5°

ARNO Kofler

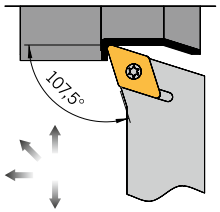

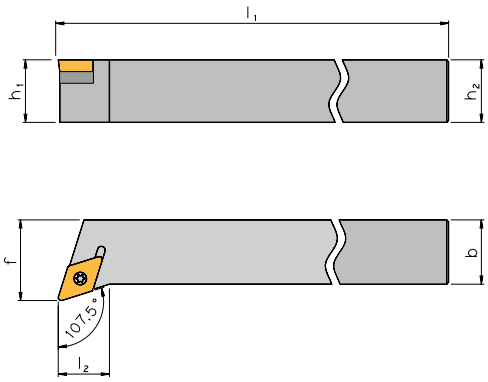

Right hand execution shown

Holder

Designation	h_1 / h_2	b	l_1	l_2	f	PG	Indexable insert
SDHC R/L 1010 E07	10	10	70	5,5	12,0	8	**DC.. 0702..**
SDHC R/L 1212 F07	12	12	80	12,0	16,0	8	**DC.. 0702..**
SDHC R/L 1616 H11	16	16	100	10,4	20,0	8	**DC.. 11T3..**
SDHC R/L 2020 K11	20	20	125	14,0	25,0	8	**DC.. 11T3..**
SDHC R/L 2525 M11	25	25	150	20,0	32,0	8	**DC.. 11T3..**

Spare Parts

For holder	Support pad	Bushing	Screw	Key	Spare part set ❹
SD.. R/L.. 07	–	–	SS 1751	KS 1751	S 1751
SD.. R/L.. 11	US 2311	GBS 1111	SS 1111	KS 1115	S 2316

❹ Spare part set consists of: 3 screws + 1 key. Depending on type of toolholder also 1 support pad + 1 bushing

SDHC R/L Approach angle 107,5°

CNC Auto Lathe

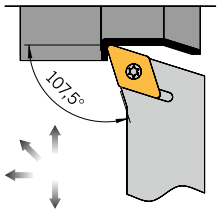

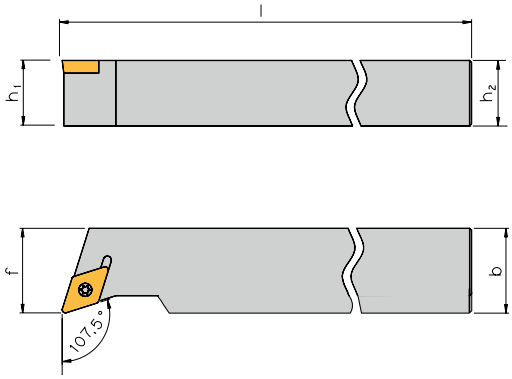

Right hand execution shown

Holder

Designation	h_1 / h_2	b	l	f	PG	Indexable insert
SDHC R/L 1010 X07-A	10	10	115	10,0	39	**DC.. 0702..**
SDHC R/L 1212 X07-A	12	12	130	12,0	39	**DC.. 0702..**
SDHC R/L 1616 X07-A	16	16	130	16,0	39	**DC.. 0702..**
SDHC R/L 1616 X11-A	16	16	130	16,0	39	**DC.. 11T3..**
SDHC R/L 2020 X11-A	20	20	120	20,0	39	**DC.. 11T3..**

Spare Parts

For holder	Screw	Key
SDHC R/L.. X07-A	SS 1751	KS 1751
SDHC R/L.. X11-A	V-M4-2400	KS 1111

Remark: All flats are ground

Dimensions in mm

SDJC R/L Approach angle 93°

ARNO Kofler

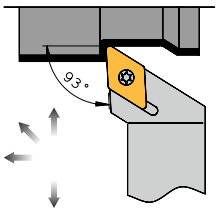

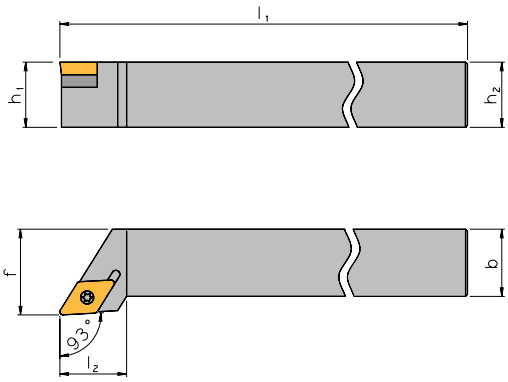

Right hand execution shown

Holder

Designation	h_1 / h_2	b	l_1	l_2	f	PG	Indexable insert
SDJC R/L 0808 D07	8	8	60	13,0	10,0	8	**DC.. 0702..**
SDJC R/L 1010 E07	10	10	70	13,0	12,0	8	**DC.. 0702..**
SDJC R/L 1212 F07	12	12	80	14,5	16,0	8	**DC.. 0702..**
SDJC R/L 1616 H11	16	16	100	20,0	20,0	8	**DC.. 11T3..**
SDJC R/L 2020 K11	20	20	125	20,5	25,0	8	**DC.. 11T3..**
SDJC R/L 2525 M11	25	25	150	21,5	32,0	8	**DC.. 11T3..**
SDJC R/L 3225 P11	32	25	170	21,5	32,0	8	**DC.. 11T3..**

Spare Parts

For holder	Support pad	Bushing	Screw	Key	Spare part set ❹
SD.. R/L.. 07	–	–	SS 1751	KS 1751	S 1751
SD.. R/L.. 11	US 2311	GBS 1111	SS 1111	KS 1115	S 2316

❹ Spare part set consists of: 3 screws + 1 key. Depending on type of toolholder also 1 support pad + 1 bushing

SDJC R/L Approach angle 93°

CNC Auto Lathe

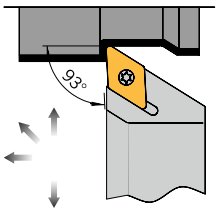

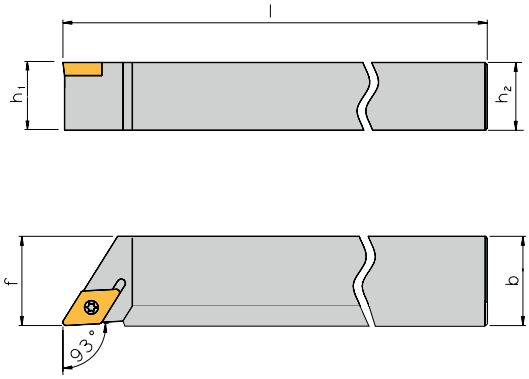

Right hand execution shown

Holder

Designation	h_1 / h_2	b	l	f	PG	Indexable insert
SDJC R/L 0808 X07-A	8	8	115	8,0	39	**DC.. 0702..**
SDJC R/L 1010 X07-A	10	10	115	10,0	39	**DC.. 0702..**
SDJC R/L 1212 X07-A	12	12	130	12,0	39	**DC.. 0702..**
SDJC R/L 1212 X11-A	12	12	130	12,0	39	**DC.. 11T3..**
SDJC R/L 1616 X07-A	16	16	130	16,0	39	**DC.. 0702..**
SDJC R/L 1616 X11-A	16	16	130	16,0	39	**DC.. 11T3..**
SDJC R/L 2020 X11-A	20	20	120	20,0	39	**DC.. 11T3..**

Spare Parts

For holder	Screw	Key
SDJC R/L.. X07-A	SS 1751	KS 1751
SDJC R/L.. X11-A	V-M4-2400	KS 1111

Remark: All flats are ground

Dimensions in mm

SDNC N Approach angle 62,5°

ARNO Kofler

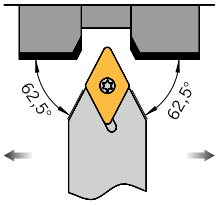

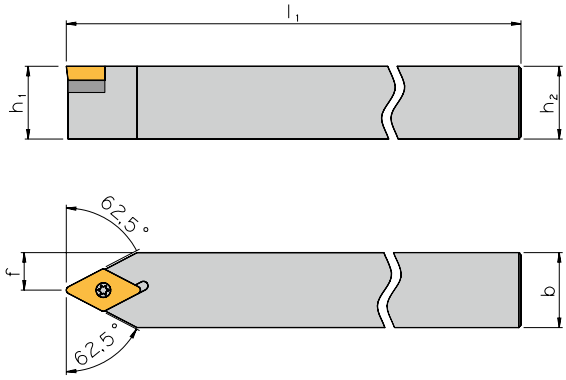

Holder

Designation	h_1 / h_2	b	l_1	f	PG	Indexable insert
SDNC N 0808 D07	8	8	60	4,0	8	**DC.. 0702..**
SDNC N 0808 K07	8	8	125	4,0	8	**DC.. 0702..**
SDNC N 1010 E07	10	10	70	5,0	8	**DC.. 0702..**
SDNC N 1010 M07	10	10	150	5,0	8	**DC.. 0702..**
SDNC N 1212 F07	12	12	80	6,0	8	**DC.. 0702..**
SDNC N 1212 M07	12	12	150	6,0	8	**DC.. 0702..**
SDNC N 1212 M11	12	12	150	6,0	8	**DC.. 11T3..**
SDNC N 1414 M11	14	14	150	7,0	8	**DC.. 11T3..**
SDNC N 1616 H11	16	16	100	8,0	8	**DC.. 11T3..**
SDNC N 2020 K11	20	20	125	10,0	8	**DC.. 11T3..**
SDNC N 2525 M11	25	25	150	12,5	8	**DC.. 11T3..**

Spare Parts

For holder	Support pad	Bushing	Screw	Key	Spare part set ❹
SD.. N.. 07	–	–	SS 1751	KS 1751	S 1751
SD.. N.. 1212- 1414.. 11	–	–	SS 1111	KS 1111	S 1111
SD.. N.. 1616-2525.. 11	US 2311	GBS 1111	SS 1111	KS 1115	S 2316

❹ **Spare part set consists of: 3 screws + 1 key. Depending on type of toolholder also 1 support pad + 1 bushing**

SDNC N Approach angle 62,5°

CNC Auto Lathe

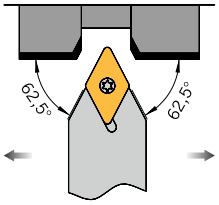

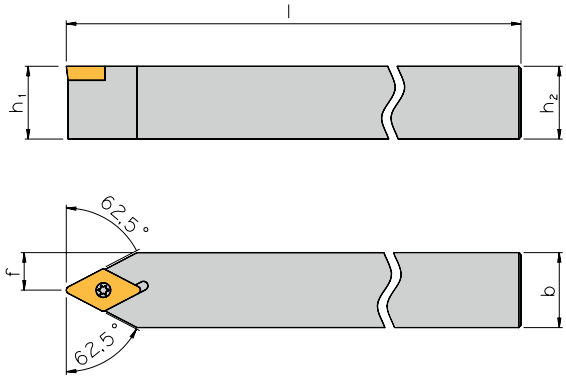

Holder

Designation	h_1 / h_2	b	l	f	PG	Indexable insert
SDNC N 0808 X07-A	8	8	115	4,0	39	**DC.. 0702..**
SDNC N 1010 X07-A	10	10	115	5,0	39	**DC.. 0702..**
SDNC N 1212 X07-A	12	12	130	6,0	39	**DC.. 0702..**
SDNC N 1212 X11-A	12	12	130	6,0	39	**DC.. 11T3..**
SDNC N 1616 X11-A	16	16	130	8,0	39	**DC.. 11T3..**
SDNC N 2020 X11-A	20	20	120	10,0	39	**DC.. 11T3..**

Spare Parts

For holder	Screw	Key
SDNC N.. X07-A	SS 1751	KS 1751
SDNC N.. X11-A	V-M4-2400	KS 1111

Remark: All flats are ground

Dimensions in mm

SRDC N

ARNO Kofler

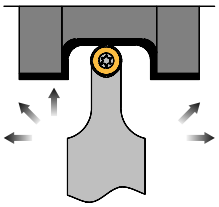

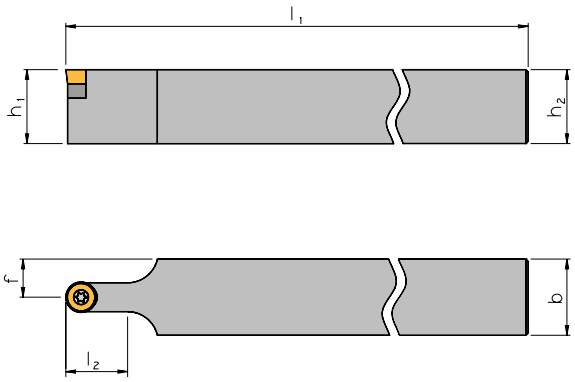

Holder

Designation	h_1 / h_2	b	l_1	l_2	f	PG	Indexable insert
SRDC N 1212 F06	12	12	80	12,4	6,0	8	**RC.. 0602..**
SRDC N 1616 H06	16	16	100	12,4	8,0	8	**RC.. 0602..**
SRDC N 1616 H08	16	16	100	16,4	8,0	8	**RC.. 0803..**
SRDC N 1616 H10	16	16	100	20,3	8,0	8	**RC.. 1003..**
SRDC N 2020 K06	20	20	125	12,4	10,0	8	**RC.. 0602..**
SRDC N 2020 K08	20	20	125	16,4	10,0	8	**RC.. 0803..**
SRDC N 2020 K10	20	20	125	20,3	10,0	8	**RC.. 1003..**
SRDC N 2525 M06	25	25	150	12,4	12,5	8	**RC.. 0602..**
SRDC N 2525 M08	25	25	150	16,4	12,5	8	**RC.. 0803..**
SRDC N 2525 M10	25	25	150	20,3	12,5	8	**RC.. 1003..**

Spare Parts

For holder	Support pad	Bushing	Screw	Key	Spare part set ❹
SR.. N.. 06	–	–	SS 1751	KS 1751	S 1751
SR.. N.. 08	–	–	SS 8831	KS 1751	S 8831
SR.. N.. 10	US 3431	GBS 1111	SS 1111	KS 1115	S 3436

❹ **Spare part set consists of: 3 screws + 1 key. Depending on type of toolholder also 1 support pad + 1 bushing.**

SRGC R/L

ARNO Kofler

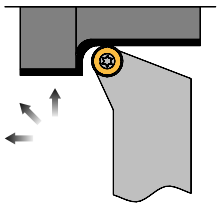

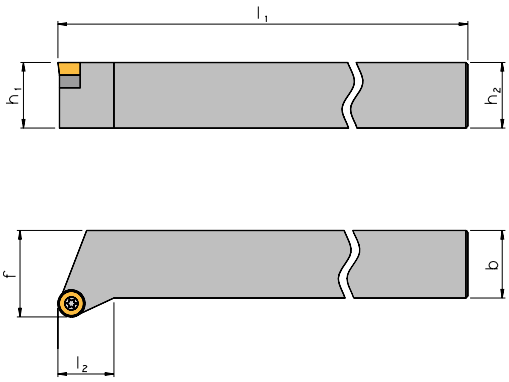

Right hand execution shown

Holder

Designation	h_1 / h_2	b	l_1	l_2	f	PG	Indexable insert
SRGC R/L 1212 F06	12	12	80	10,0	16,0	8	**RC.. 0602..**
SRGC R/L 1616 H06	16	16	100	10,0	20,0	8	**RC.. 0602..**
SRGC R/L 1616 H08	16	16	100	11,0	20,0	8	**RC.. 0803..**
SRGC R/L 1616 H10	16	16	100	12,0	20,0	8	**RC.. 1003..**
SRGC R/L 2020 K06	20	20	125	11,5	25,0	8	**RC.. 0602..**
SRGC R/L 2020 K08	20	20	125	13,0	25,0	8	**RC.. 0803..**
SRGC R/L 2020 K10	20	20	125	13,5	25,0	8	**RC.. 1003..**
SRGC R/L 2525 M06	25	25	150	15,0	32,0	8	**RC.. 0602..**
SRGC R/L 2525 M08	25	25	150	16,0	32,0	8	**RC.. 0803..**
SRGC R/L 2525 M10	25	25	150	17,0	32,0	8	**RC.. 1003..**

Spare Parts

For holder	Support pad	Bushing	Screw	Key	Spare part set ❹
SR.. R/L.. 06	–	–	SS 1751	KS 1751	S 1751
SR.. R/L.. 08	–	–	SS 8831	KS 1751	S 8831
SR.. R/L.. 10	US 3431	GBS 1111	SS 1111	KS 1115	S 3436

❹ Spare part set consists of: 3 screws + 1 key. Depending on type of toolholder also 1 support pad + 1 bushing.

Dimensions in mm

SSBC R/L Approach angle 75°

ARNO Kofler

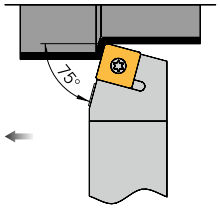

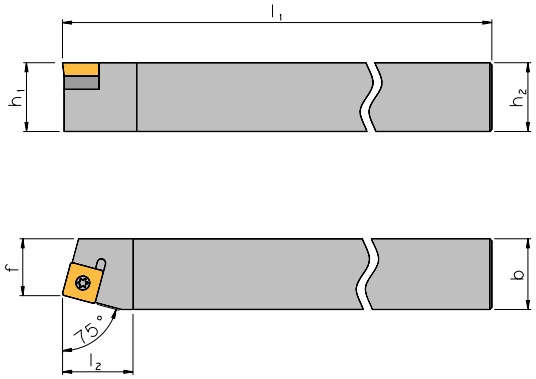

Right hand execution shown

Holder

Designation	h_1 / h_2	b	l_1	l_2	f	PG	Indexable insert
SSBC R/L 1616 H09	16	16	100	20	13,0	8	**SC.. 09T3..**
SSBC R/L 2020 K09	20	20	125	20	17,0	8	**SC.. 09T3..**
SSBC R/L 2020 K12	20	20	125	20	17,0	8	**SC.. 1204..**
SSBC R/L 2525 M12	25	25	150	20	22,0	8	**SC.. 1204..**

Spare Parts

For holder	Support pad	Bushing	Screw	Key	Spare part set ❹
SS.. R/L.. 09	US 4111	GBS 1111	SS 1111	KS 1115	S 4116
SS.. R/L.. 12	US 4221	GBS 1221	SS 1221	KS 1115	S 4226

❹ Spare part set consists of: 3 screws + 1 key. Depending on type of toolholder also 1 support pad + 1 bushing.

1

SSDC N Approach angle 45°

ARNO Kofler

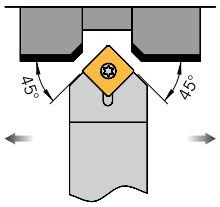

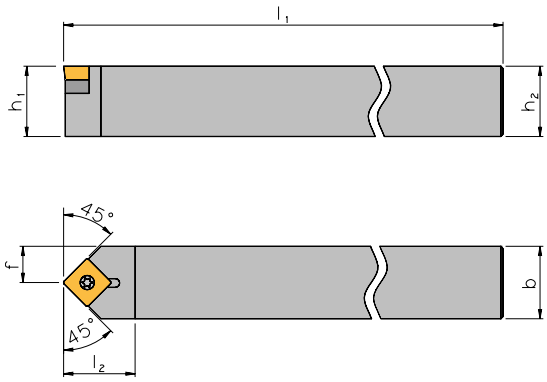

Holder

Designation	h_1 / h_2	b	l_1	l_2	f	PG	Indexable insert
SSDC N 1212 F09	12	12	80	16	6,0	8	**SC.. 09T3..**
SSDC N 1616 H09	16	16	100	20	8,0	8	**SC.. 09T3..**
SSDC N 1616 H12	16	16	100	25	8,0	8	**SC.. 1204..**
SSDC N 2020 K09	20	20	125	20	10,0	8	**SC.. 09T3..**
SSDC N 2020 K12	20	20	125	25	10,0	8	**SC.. 1204..**
SSDC N 2525 M12	25	25	150	25	12,5	8	**SC.. 1204..**

Spare Parts

For holder	Support pad	Bushing	Screw	Key	Spare part set ❹
SS.. N.. 1212.. 09	–	–	SS 1111	KS 1111	S 1111
SS.. N.. 1616-2020.. 09	US 4111	GBS 1111	SS 1111	KS 1115	S 4116
SS.. N.. 12	US 4221	GBS 1221	SS 1221	KS 1115	S 4226

❹ **Spare part set consists of: 3 screws + 1 key. Depending on type of toolholder also 1 support pad + 1 bushing.**

Dimensions in mm

SSKC R/L Approach angle 75°

ARNO Kofler

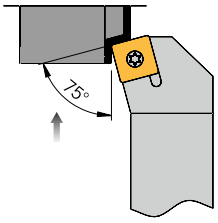

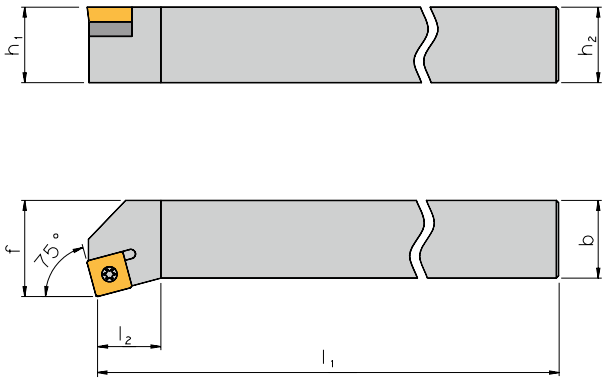

Right hand execution shown

Holder

Designation	h_1 / h_2	b	l_1	l_2	f	PG	Indexable insert
SSKC R/L 1616 H09	16	16	100	22	20,0	8	**SC.. 09T3..**
SSKC R/L 1616 H12	16	16	100	23	20,0	8	**SC.. 1204..**
SSKC R/L 2020 K09	20	20	125	22	25,0	8	**SC.. 09T3..**
SSKC R/L 2020 K12	20	20	125	23	25,0	8	**SC.. 1204..**
SSKC R/L 2525 M12	25	25	150	23	32,0	8	**SC.. 1204..**

Spare Parts

For holder	Support pad	Bushing	Screw	Key	Spare part set ❹
SS.. R/L.. 09	US 4111	GBS 1111	SS 1111	KS 1115	S 4116
SS.. R/L.. 12	US 4221	GBS 1221	SS 1221	KS 1115	S 4226

❹ Spare part set consists of: 3 screws + 1 key. Depending on type of toolholder also 1 support pad + 1 bushing

1

SSSC R/L Approach angle 45°

ARNO Kofler

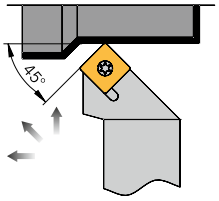

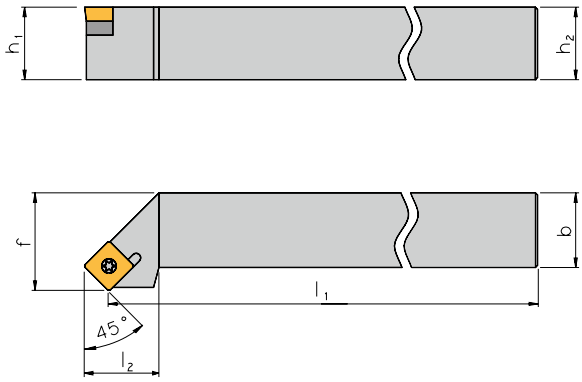

Right hand execution shown

Holder

Designation	h_1 / h_2	b	l_1	l_2	f	PG	Indexable insert
SSSC R/L 1212 F09	12	12	80	18	16	8	**SC.. 09T3..**
SSSC R/L 1616 H09	16	16	100	20	20	8	**SC.. 09T3..**
SSSC R/L 1616 H12	16	16	100	25	20	8	**SC.. 1204..**
SSSC R/L 2020 K09	20	20	125	20	25	8	**SC.. 09T3..**
SSSC R/L 2020 K12	20	20	125	25	25	8	**SC.. 1204..**
SSSC R/L 2525 M12	25	25	150	25	32	8	**SC.. 1204..**
SSSC R/L 3225 P12	32	25	170	25	32	8	**SC.. 1204..**

Spare Parts

For holder	Support pad	Bushing	Screw	Key	Spare part set ❹
SS.. R/L.. 1212.. 09	–	–	SS 1111	KS 1111	S 1111
SS.. R/L.. 1616-2020.. 09	US 4111	GBS 1111	SS 1111	KS 1115	S 4116
SS.. R/L.. 12	US 4221	GBS 1221	SS 1221	KS 1115	S 4226

❹ Spare part set consists of: 3 screws + 1 key. Depending on type of toolholder also 1 support pad + 1 bushing

Dimensions in mm

STAC R/L Approach angle 90°

ARNO Kofler

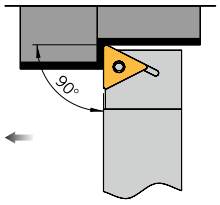

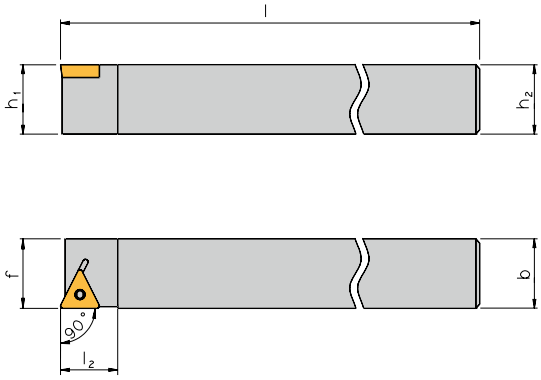

Right hand execution shown

Holder

Designation	h_1 / h_2	b	l_1	l_2	f	PG	Indexable insert
STAC R/L 1010 K09	10	10	125	12	10,0	8	**TC.. 0902..**
STAC R/L 1212 K11	12	12	125	15	12,0	8	**TC.. 1102..**
STAC R/L 1414 K11	14	14	125	15	14,0	8	**TC.. 1102..**
STAC R/L 1616 K11	16	16	125	15	16,0	8	**TC.. 1102..**

Spare Parts

For holder	Screw	Key	Spare part set ❹
ST.. R/L.. 09	SS 5151	KS 5151	S 5151
ST.. R/L.. 11	SS 1751	KS 1751	S 1751

❹ Spare part set consists of: 3 screws + 1 key

Dimensions in mm

STAC R/L Approach angle 90°

CNC Auto Lathe

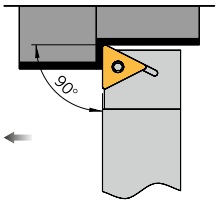

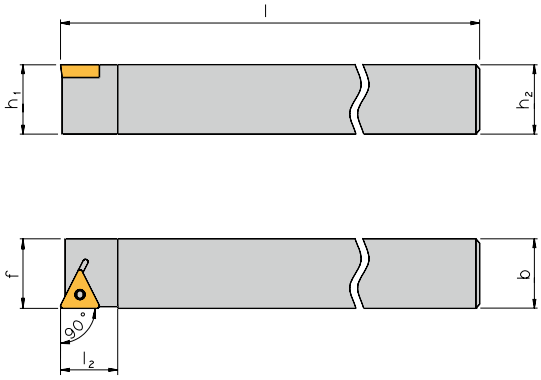

Right hand execution shown

Holder

Designation	h_1 / h_2	b	l	f	PG	Indexable insert
STAC R/L 0808 X06-A	8	8	115	8,0	39	TC.. 06T1..
STAC R/L 1010 X09-A	10	10	115	10,0	39	TC.. 0902..
STAC R/L 1212 X11-A	12	12	130	12,0	39	TC.. 1102..
STAC R/L 1616 X11-A	16	16	130	16,0	39	TC.. 1102..
STAC R/L 2020 X11-A	20	20	120	20,0	39	TC.. 1102..

Spare Parts

For holder	Screw	Key	Spare part set ❹
STAC R/L.. X06-A	SS 5140	KS 1886	S 5140
STAC R/L.. X09-A	SS 5151	KS 5151	S 5151
STAC R/L.. X11-A	SS 1751	KS 1751	S 1751

❹ Spare part set consists of: 3 screws + 1 key

Remark: All flats are ground

Dimensions in mm

STCC N Approach angle 90°

ARNO Kofler

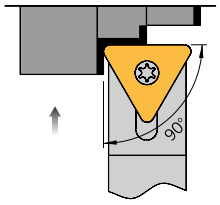

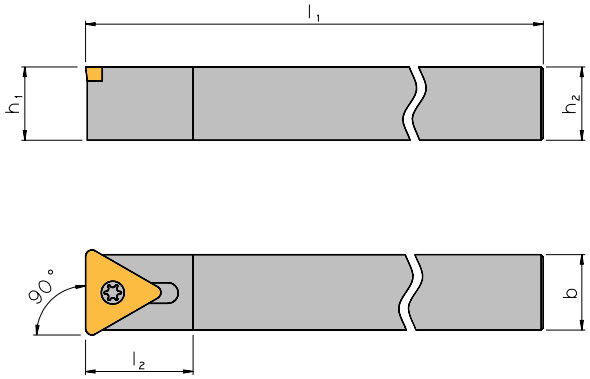

Holder

Designation	h_1 / h_2	b	l_1	l_2	PG	Indexable insert
STCC N 0808 K09	8	8	125	11	8	**TC.. 0902..**
STCC N 1010 K11	10	10	125	15	8	**TC.. 1102..**
STCC N 1212 K11	12	12	125	15	8	**TC.. 1102..**
STCC N 1414 K11	14	14	125	21	8	**TC.. 1102..**
STCC N 1616 K11	16	16	125	24	8	**TC.. 1102..**

Spare Parts

For holder	Screw	Key	Spare part set ❹
ST.. N.. 09	SS 5151	KS 5151	S 5151
ST.. N.. 11	SS 1751	KS 1751	S 1751

❹ Spare part set consists of: 3 screws + 1 key

1

STFC R/L Approach angle 90°

ARNO Kofler

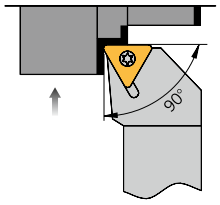

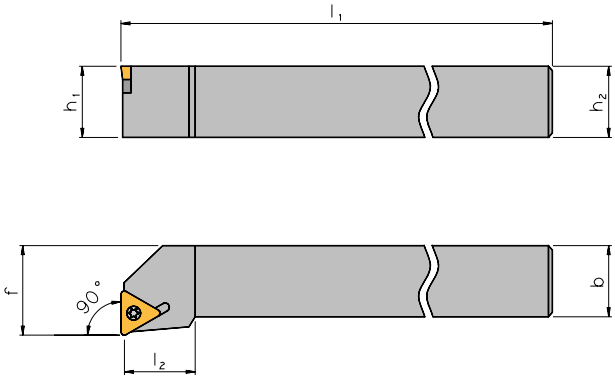

Right hand execution shown

Holder

Designation	h_1 / h_2	b	l_1	l_2	f	PG	Indexable insert
STFC R/L 0808 D09	8	8	60	11	10,0	8	**TC.. 0902..**
STFC R/L 1010 E09	10	10	70	11	12,0	8	**TC.. 0902..**
STFC R/L 1212 F11	12	12	80	15	16,0	8	**TC.. 1102..**
STFC R/L 1616 H16	16	16	100	20	20,0	8	**TC.. 16T3..**
STFC R/L 2020 K16	20	20	125	20	25,0	8	**TC.. 16T3..**
STFC R/L 2525 M16	25	25	150	20	32,0	8	**TC.. 16T3..**

Spare Parts

For holder	Support pad	Bushing	Screw	Key	Spare part set ❹
ST.. R/L.. 09	–	–	SS 5151	KS 5151	S 5151
ST.. R/L.. 11	–	–	SS 1751	KS 1751	S 1751
ST.. R/L.. 16	US 5511	GBS 1111	SS 1111	KS 1115	S 5516

❹ Spare part set consists of: 3 screws + 1 key. Depending on type of toolholder also 1 support pad + 1 bushing

Dimensions in mm

STGC R/L Approach angle 90°

ARNO Kofler

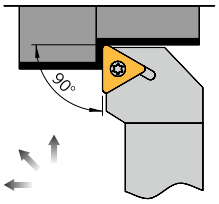

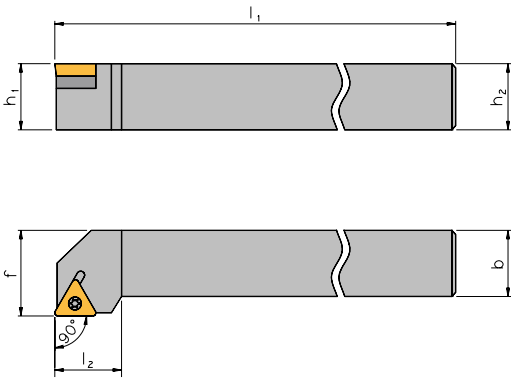

Right hand execution shown

Holder

Designation	h_1 / h_2	b	l_1	l_2	f	PG	Indexable insert
STGC R/L 1010 E09	10	10	70	12	12,0	8	**TC.. 0902..**
STGC R/L 1212 F11	12	12	80	15	16,0	8	**TC.. 1102..**
STGC R/L 1616 H16	16	16	100	22	20,0	8	**TC.. 16T3..**
STGC R/L 2020 K16	20	20	125	22	25,0	8	**TC.. 16T3..**
STGC R/L 2525 M16	25	25	150	22	32,0	8	**TC.. 16T3..**

Spare Parts

For holder	Support pad	Bushing	Screw	Key	Spare part set ❹
ST.. R/L.. 09	–	–	SS 5151	KS 5151	S 5151
ST.. R/L.. 11	–	–	SS 1751	KS 1751	S 1751
ST.. R/L.. 16	US 5511	GBS 1111	SS 1111	KS 1115	S 5516

❹ Spare part set consists of: 3 screws + 1 key. Depending on type of toolholder also 1 support pad + 1 bushing

SVAC R/L Approach angle 90°

CNC Auto Lathe

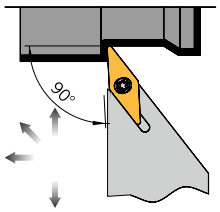

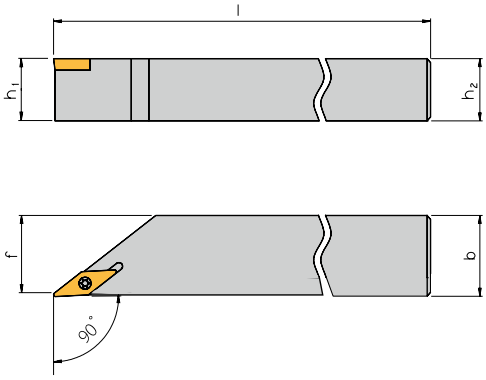

Right hand execution shown

Holder

Designation	h_1 / h_2	b	l	f	PG	Indexable insert
SVAC R/L 0808 X11-A	8	8	115	8,0	39	VC.. 1103..
SVAC R/L 1010 X11-A	10	10	115	10,0	39	VC.. 1103..
SVAC R/L 1212 X11-A	12	12	130	12,0	39	VC.. 1103..
SVAC R/L 1212 X16-A	12	12	130	12,0	39	VC.. 1604..
SVAC R/L 1616 X11-A	16	16	130	16,0	39	VC.. 1103..
SVAC R/L 1616 X16-A	16	16	130	16,0	39	VC.. 1604..
SVAC R/L 2020 X16-A	20	20	120	20,0	39	VC.. 1604..

Spare Parts

For holder	Screw	Key
SVAC R/L.. X11-A	SS 1751	KS 1751
SVAC R/L.. X16-A	V-M4-2700	KS 1111

Remark: All flats are ground

SVGC R/L Approach angle 90°

ARNO Kofler

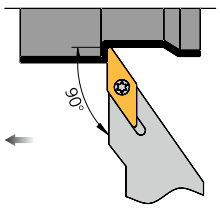

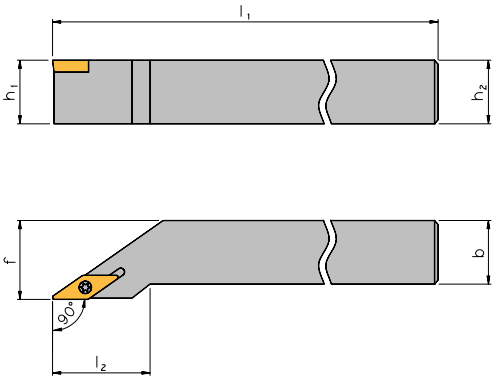

Right hand execution shown

Holder

Designation	h_1 / h_2	b	l_1	l_2	f	PG	Indexable insert
SVGC R/L 0808 K07	8	8	125	15	8,5	8	VC.. 0702..
SVGC R/L 1010 M07	10	10	150	15	10,5	8	VC.. 0702..
SVGC R/L 1212 M07	12	12	150	18	12,5	8	VC.. 0702..

Spare Parts

For holder	Screw	Key
SV.. R/L.. 07	SS 5140	KS 1886

Dimensions in mm

SVHC R/L Approach angle 107,5°

ARNO Kofler

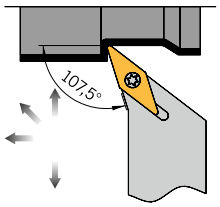

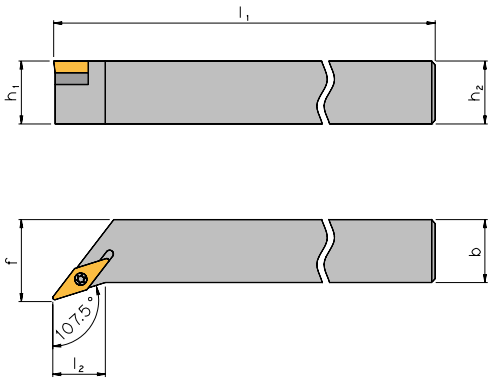

Right hand execution shown

Holder

Designation	h_1 / h_2	b	l_1	l_2	f	PG	Indexable insert
SVHC R/L 1212 F11	12	12	80	11,4	16,0	8	VC.. 1103..
SVHC R/L 1616 H11	16	16	100	11,4	20,0	8	VC.. 1103..
SVHC R/L 2020 K11	20	20	125	14,6	25,0	8	VC.. 1103..
SVHC R/L 2020 K13	20	20	125	13,2	25,0	8	VC.. 1303..
SVHC R/L 2020 K16	20	20	125	13,2	25,0	8	VC.. 1604..
SVHC R/L 2020 K22	20	20	125	13,2	25,0	8	VC.. 2205..
SVHC R/L 2525 M11	25	25	150	20,9	32,0	8	VC.. 1103..
SVHC R/L 2525 M13	25	25	150	19,6	32,0	8	VC.. 1303..
SVHC R/L 2525 M16	25	25	150	19,6	32,0	8	VC.. 1604..
SVHC R/L 2525 M22	25	25	150	19,6	32,0	8	VC.. 2205..
SVHC R/L 3225 P16	32	25	170	19,6	32,0	8	VC.. 1604..
SVHC R/L 3225 P22	32	25	170	19,6	32,0	8	VC.. 2205..

Spare Parts

For holder	Support pad	Bushing	Screw	Key	Spare part set ❹
SV.. R/L.. 11	–	–	SS 1751	KS 1751	S 1751
SV.. R/L.. 13	–	–	SS 8831	KS 1751	S 8831
SV.. R/L.. 16	US 6522 ❶ / US 6523 ❷	GBS 1111	SS 1111	KS 1115	S 6527 ❶ / S 6528 ❷
SV.. R/L.. 22	US 6641	GBS 1221	SS 1221	KS 1115	S 6646

❶ For indexable inserts with 0,8mm radius

❷ For indexable inserts with 1,2mm radius

❹ Spare part set consists of: 3 screws + 1 key. Depending on type of toolholder also 1 support pad + 1 bushing

1

SVJC R/L Approach angle 93°

ARNO Kofler

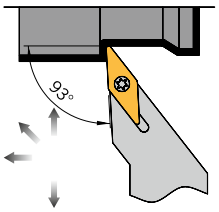

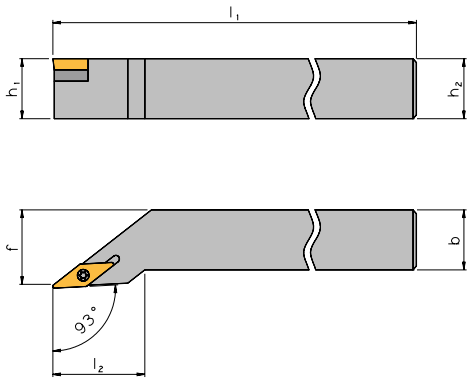

Right hand execution shown

Holder

Designation	h_1 / h_2	b	l_1	l_2	f	PG	Indexable insert
SVJC R/L 1212 F11	12	12	80	21,5	16,0	8	**VC.. 1103..**
SVJC R/L 1616 H11	16	16	100	21,5	20,0	8	**VC.. 1103..**
SVJC R/L 1616 H16	16	16	100	21,5	20,0	8	**VC.. 1604..**
SVJC R/L 2020 K11	20	20	125	23,0	25,0	8	**VC.. 1103..**
SVJC R/L 2020 K13	20	20	125	29,5	25,0	8	**VC.. 1303..**
SVJC R/L 2020 K16	20	20	125	29,5	25,0	8	**VC.. 1604..**
SVJC R/L 2525 M11	25	25	150	25,5	32,0	8	**VC.. 1103..**
SVJC R/L 2525 M13	25	25	150	25,5	32,0	8	**VC.. 1303..**
SVJC R/L 2525 M16	25	25	150	32,5	32,0	8	**VC.. 1604..**
SVJC R/L 3225 P16	32	25	170	32,5	32,0	8	**VC.. 1604..**

Spare Parts

For holder	Support pad	Bushing	Screw	Key	Spare part set ❹
SV.. R/L.. 11	–	–	SS 1751	KS 1751	S 1751
SV.. R/L.. 13	–	–	SS 8831	KS 1751	S 8831
SV.. R/L.. 16	US 6522 ❶ / US 6523 ❷	GBS 1111	SS 1111	KS 1115	S 6527 ❶ / S 6528 ❷

❶ For indexable inserts with 0,8mm radius

❷ For indexable inserts with 1,2mm radius

❹ Spare part set consists of: 3 screws + 1 key. Depending on type of toolholder also 1 support pad + 1 bushing

Dimensions in mm

SVJC R/L Approach angle 93°

CNC Auto Lathe

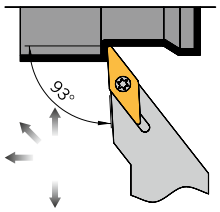

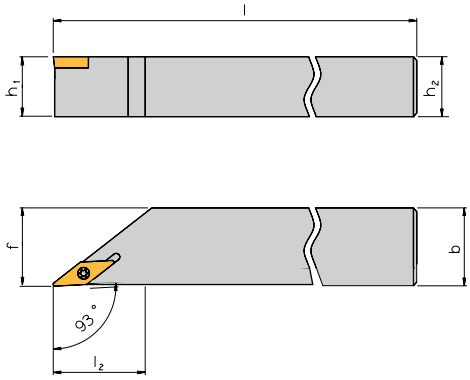

Right hand execution shown

Holder

Designation	h_1 / h_2	b	l	f	PG	Indexable insert
SVJC R/L 0808 X11-A	8	8	115	8,0	39	VC.. 1103..
SVJC R/L 1010 X11-A	10	10	115	10,0	39	VC.. 1103..
SVJC R/L 1212 X11-A	12	12	130	12,0	39	VC.. 1103..
SVJC R/L 1212 X16-A	12	12	130	12,0	39	VC.. 1604..
SVJC R/L 1616 X11-A	16	16	130	16,0	39	VC.. 1103..
SVJC R/L 1616 X16-A	16	16	130	16,0	39	VC.. 1604..
SVJC R/L 2020 X16-A	20	20	120	20,0	39	VC.. 1604..

Spare Parts

For holder	Screw	Key
SVJC R/L.. X11-A	SS 1751	KS 1751
SVJC R/L.. X16-A	V-M4-2700	KS 1111

Remark: All flats are ground

SVLC R/L Approach angle 95°

ARNO Kofler

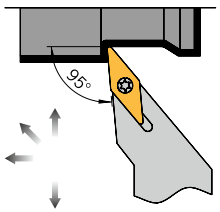

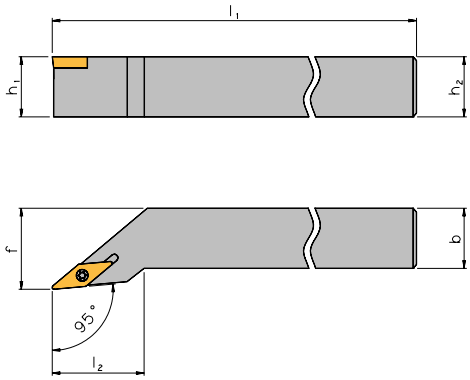

Right hand execution shown

Holder

Designation	h_1 / h_2	b	l_1	l_2	f	PG	Indexable insert
SVLC R/L 0808 D07	8	8	60	15	10,0	8	VC.. 0702..
SVLC R/L 1010 E07	10	10	70	15	12,0	8	VC.. 0702..
SVLC R/L 1212 F07	12	12	80	18	16,0	8	VC.. 0702..

Spare Parts

For holder	Screw	Key
SV.. R/L.. 07	SS 5140	KS 1886

1

SVVC N Approach angle 72,5°

ARNO Kofler

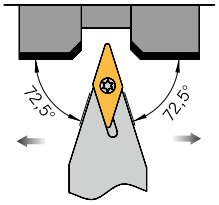

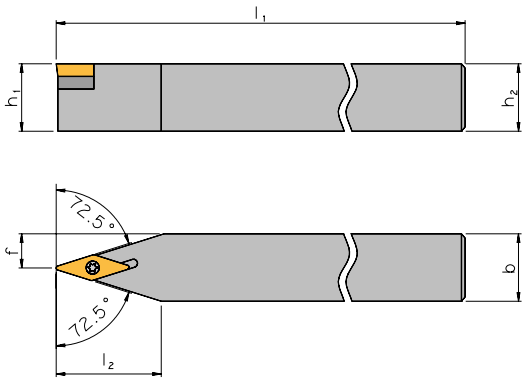

Holder

Designation	h_1 / h_2	b	l_1	l_2	f	PG	Indexable insert
SVVC N 0808 K07	8	8	125	15	4,0	8	**VC.. 0702..**
SVVC N 1010 M07	10	10	150	16	5,0	8	**VC.. 0702..**
SVVC N 1212 F11	12	12	80	19	6,0	8	**VC.. 1103..**
SVVC N 1212 M07	12	12	150	19	6,0	8	**VC.. 0702..**
SVVC N 1616 H11	16	16	100	25	8,0	8	**VC.. 1103..**
SVVC N 1616 H16	16	16	100	25	8,0	8	**VC.. 1604..**
SVVC N 2020 K11	20	20	125	32	10,0	8	**VC.. 1103..**
SVVC N 2020 K13	20	20	125	32	10,0	8	**VC.. 1303..**
SVVC N 2020 K16	20	20	125	32	10,0	8	**VC.. 1604..**
SVVC N 2525 M11	25	25	150	40	12,5	8	**VC.. 1103..**
SVVC N 2525 M13	25	25	150	40	12,5	8	**VC.. 1303..**
SVVC N 2525 M16	25	25	150	40	12,5	8	**VC.. 1604..**
SVVC N 3225 P16	32	25	170	40	12,5	8	**VC.. 1604..**

Spare Parts

For holder	Support pad	Bushing	Screw	Key	Spare part set ❹
SV.. N.. 07	–	–	SS 5140	KS 1886	–
SV.. N.. 11	–	–	SS 1751	KS 1751	S 1751
SV.. N.. 13	–	–	SS 8831	KS 1751	S 8831
SV.. N.. 16	US 6522 ❶ / US 6523 ❷	GBS 1111	SS 1111	KS 1115	S 6527 ❶ / S 6528 ❷

❶ For indexable inserts with 0,8mm radius

❷ For indexable inserts with 1,2mm radius

❹ Spare part set consists of: 3 screws + 1 key. Depending on type of toolholder also 1 support pad + 1 bushing

Dimensions in mm

SVVC N Approach angle 72,5°

CNC Auto Lathe

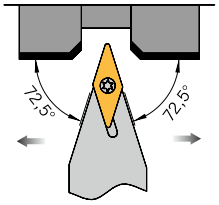

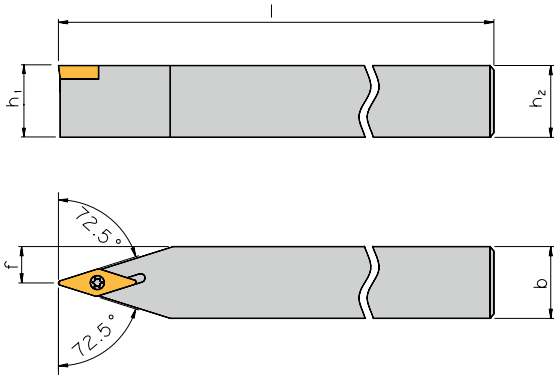

Holder

Designation	h_1 / h_2	b	l	f	PG	Indexable insert
SVVC N 0808 X11-A	8	8	115	4,0	39	VC.. 1103..
SVVC N 1010 X11-A	10	10	115	5,0	39	VC.. 1103..
SVVC N 1212 X11-A	12	12	130	6,0	39	VC.. 1103..
SVVC N 1212 X16-A	12	12	130	6,0	39	VC.. 1604..
SVVC N 1616 X11-A	16	16	130	8,0	39	VC.. 1103..
SVVC N 1616 X16-A	16	16	130	8,0	39	VC.. 1604..
SVVC N 2020 X16-A	20	20	120	10,0	39	VC.. 1604..

Spare Parts

For holder	Screw	Key
SVVC N.. X11-A	SS 1751	KS 1751
SVVC N.. X16-A	V-M4-2700	KS 1111

Remark: All flats are ground

SVXC R/L Approach angle 113°

ARNO Kofler

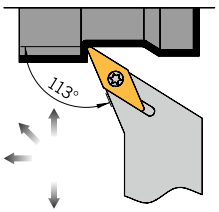

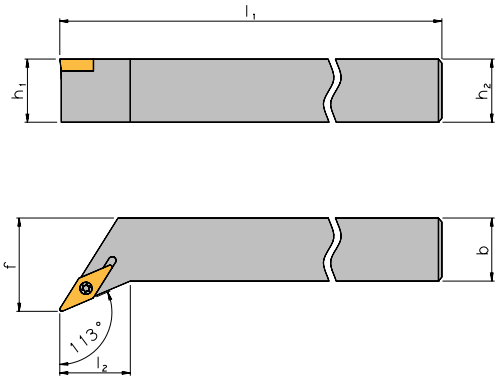

Right hand execution shown

Holder

Designation	h_1 / h_2	b	l_1	l_2	f	PG	Indexable insert
SVXC R/L 0808 D07	8	8	60	15	10,0	8	VC.. 0702..
SVXC R/L 1010 E07	10	10	70	15	12,0	8	VC.. 0702..
SVXC R/L 1212 F07	12	12	80	18	16,0	8	VC.. 0702..

Spare Parts

For holder	Screw	Key
SV.. R/L.. 07	SS 5140	KS 1886

SVXC R/L Approach angle 117,5°

CNC Auto Lathe

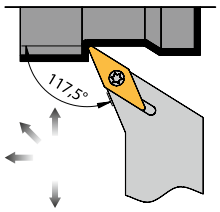

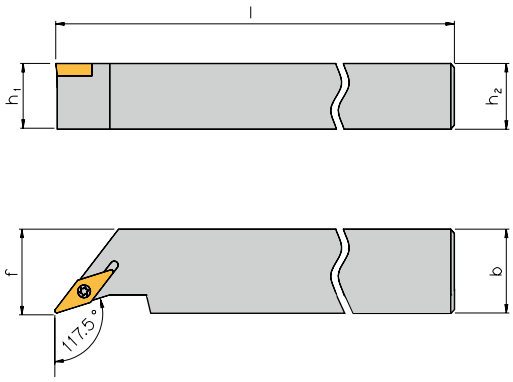

Right hand execution shown

Holder

Designation	h_1 / h_2	b	l	f	PG	Indexable insert
SVXC R/L 1616 X11-A	16	16	130	16,0	39	VC.. 1103..
SVXC R/L 2020 X11-A	20	20	120	20,0	39	VC.. 1103..

Spare Parts

For holder	Screw	Key
SVXC R/L.. X11-A	SS 1751	KS 1751

Remark: All flats are ground

SVZC R/L Approach angle 100°

ARNO Kofler

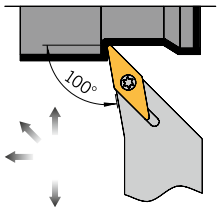

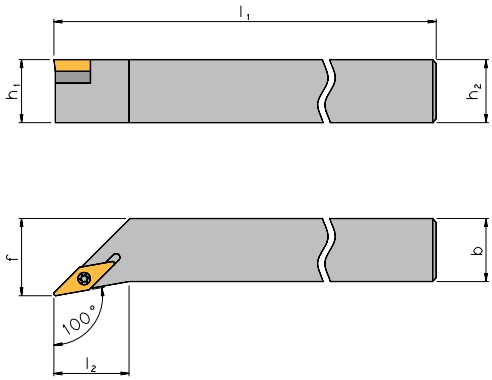

Right hand execution shown

Holder

Designation	h_1 / h_2	b	l_1	l_2	f	PG	Indexable insert
SVZC R/L 2525 M16	25	25	150	28,5	32,0	8	VC.. 1604..

Spare Parts

For holder	Support pad	Bushing	Screw	Key	Spare part set ❹
SV.. R/L.. 16	US 6522 ❶ / US 6523 ❷	GBS 1111	SS 1111	KS 1115	S 6527 ❶ / S 6528 ❷

❶ For indexable inserts with 0,8mm radius

❷ For indexable inserts with 1,2mm radius

❹ Spare part set consists of: 3 screws + 1 key. Depending on type of toolholder also 1 support pad + 1 bushing

Dimensions in mm

SWLC R/L Approach angle 95°

ARNO Kofler

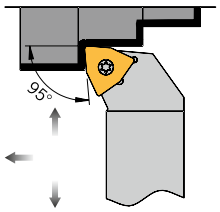

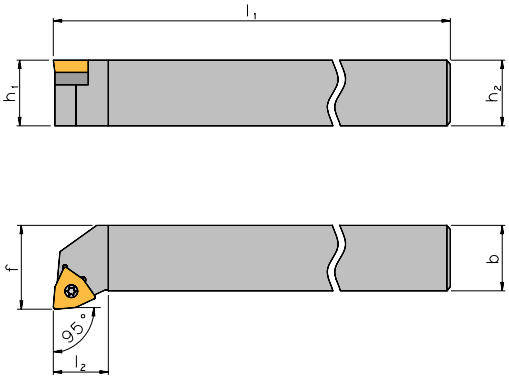

Right hand execution shown

Holder

Designation	h_1 / h_2	b	l_1	l_2	f	PG	Indexable insert
SWLC R/L 1010 E04	10	10	70	9	12,0	8	**WC.. 0402...**
SWLC R/L 1212 F06	12	12	80	14	16,0	8	**WC.. 06T3..**
SWLC R/L 1616 H06	16	16	100	16	20,0	8	**WC.. 06T3..**
SWLC R/L 1616 H08	16	16	100	17	20,0	8	**WC.. 0804..**
SWLC R/L 2020 K06	20	20	125	16	25,0	8	**WC.. 06T3..**
SWLC R/L 2020 K08	20	20	125	18	25,0	8	**WC.. 0804..**
SWLC R/L 2525 M08	25	25	150	21	32,0	8	**WC.. 0804..**

Spare Parts

For holder	Support pad	Bushing	Screw	Key	Spare part set ❹
SW.. R/L.. 04	–	–	SS 1751	KS 1751	S 1751
SW.. R/L.. 1212.06	–	–	SS 1111	KS 1111	S 1111
SW.. R/L.. 1616-2020.06	US 8711	GBS 1111	SS 1111	KS 1115	S 8711
SW.. R/L.. 08	US 8821	GBS 1221	SS 1221	KS 1115	S 8821

❹ Spare part set consists of: 3 screws + 1 key. Depending on type of toolholder also 1 support pad + 1 bushing

Set 1

Adjustable from 0,6 Nm – 1,5 Nm

1 Torque screwdriver
1/ea Bit Torx T6, Torx T7, Torx T8 and Torx T9
1 Adjustment key

(Order as: SET-TORQUE 1)

Set 2

Adjustable from 1,5 Nm – 3,0 Nm

1 Torque screwdriver
1/ea Bit Torx T9, Torx T10 and Torx T15
1 Adjustment key

(Order as: SET-TORQUE 2)

Set 3

Adjustable from 3,0 Nm – 5,4 Nm

1 Torque screwdriver
1/ea Bit Torx T10, Torx T15 and Torx T20
1 Adjustment key

(Order as: SET-TORQUE 3)

Recommended torque settings for indexable inserts

Thread	Torx size	max. torque
M1,8	T6	0,6 Nm
M2	T6	0,6 Nm
M2	T7	0,6 Nm
M2,2	T6	1,0 Nm
M2,2	T7	1,0 Nm
M2,2	T8	1,3 Nm
M3	T8	2,2 Nm
M3	T9	2,2 Nm
M3,5	T15	3,4 Nm
M4	T15	5,1 Nm
M4,5	T20	6,2 Nm
M5	T20	6,2 Nm
M6	T25	8,1 Nm

ARNO®
WERKZEUGE

Order Hotline: 800-943-4426

Monday - Friday: 8AM to 5PM Central Time

ARNO®
WERKZEUGE

Order Hotline: 800-943-4426

Monday - Friday, 8 to 5PM Central Time

Internal Machining

- ISO-Designation System 80 – 81
- Overview 82 – 83
- Boring Bars and Spare Parts 84 – 119
  - Top Clamping Boring Bars 84 – 88
  - Lever Lock Clamping Boring Bars 89 – 93
  - Screw Clamping Boring Bars 94 – 119
- Torque Screwdriver Sets 120

ISO Designation System for Boring Bars

2

A
Steel shank with coolant through

B
Steel shank with vibration damping

C
Carbide shank with brazed steel head

E
Carbide shank with brazed steel head and coolant through

S
Steel shank

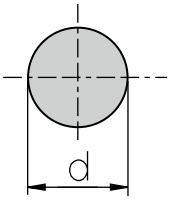

d [mm]
08
10
12
16
20
25
32
40
50
60

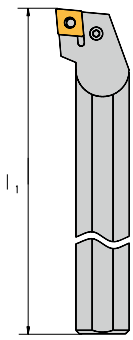

	l_1 [mm]		l_1 [mm]
A	32	M	150
B	40	N	160
C	50	P	170
D	60	Q	180
E	70	R	200
F	80	S	250
G	90	T	300
H	100	U	350
J	110	V	400
K	125	W	450
L	140	Y	500
Special length		X	

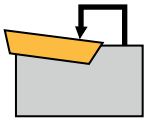
C
Top clamping

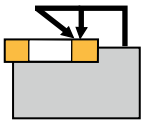
D
Top and hole clamping

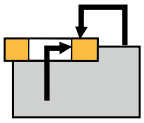
M
Top and hole clamping

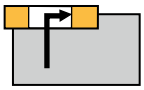
P
Lever lock clamping

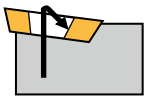
S
Screw clamping

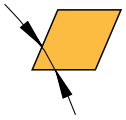

80°	C
55°	D
75°	E
86°	M
35°	V

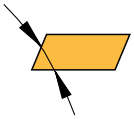

85°	A
82°	B
55°	K

	H
	L
	O
	P
	R
	S
	T
	W

S	32	U	P	C
Type of shank	Shank-Ø	Length	Clamping method	Shape

ISO Designation System for Boring Bars

F

K

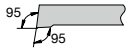

L

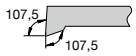

Q

S

U

W

Y

Special style ↗ X

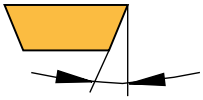

3°	A
5°	B
7°	C
15°	D
20°	E
25°	F
30°	G
0°	N
11°	P
Others ↗	O

R

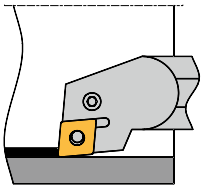

L

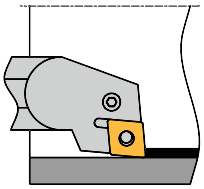

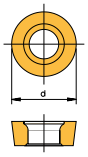

d [mm]

06
08
10
12
16
20
25
32

d [mm]	[inch]	[mm]	[mm]
06	5/32	3,97	**03**
08	3/16	4,76	**04**
09	7/32	5,56	**05**
11	1/4	6,35	**06**
16	3/8	9,525	**09**
22	1/2	12,7	**12**
27	5/8	15,875	**15**
33	3/4	19,05	**19**
44	1	25,4	**25**

Special product information can be indicated by an internal company coding system at the 10th position.

L	N	L	12	...
Style	**Clearance angle**	**Holder execution**	**Insert size**	**Additional coding system**

2

Top Clamping – Positive

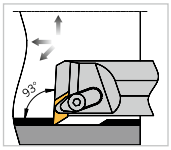

ACKUC R/L
Page 84

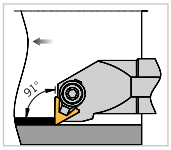

CTFP R/L
Page 85

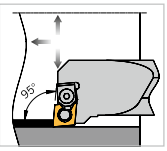

MCLC R/L
Page 87

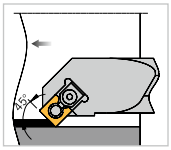

MSSC R/L
Page 88

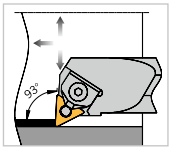

MTUC R/L
Page 88

2

Top Clamping – Negative

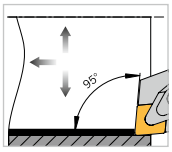

DCLN R/L
Page 85

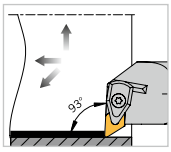

DDUN R/L
Page 86

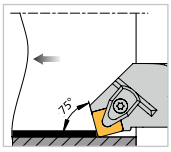

DSKN R/L
Page 86

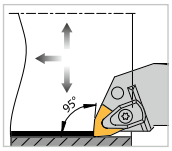

DWLN R/L
Page 87

Lever Lock Clamping – Negative

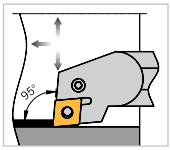

PCLN R/L
Page 89

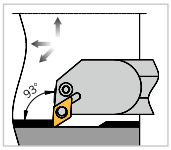

PDUN R/L
Page 90

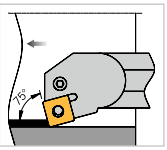

PSKN R/L
Page 91

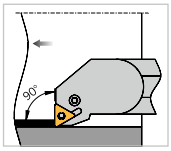

PTFN R/L
Page 92

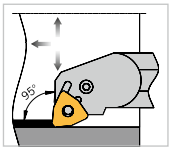

PWLN R/L
Page 93

Screw Clamping – Positive

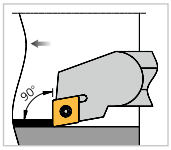

SCFC R/L
Page 94/95

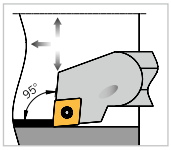

SCLC R/L
Page 96

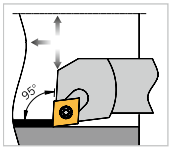

SCLD R/L
Page 97/98

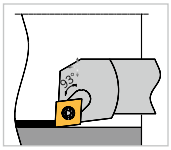

SCUP R/L
Page 99

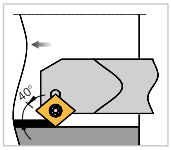

SCXP R/L
Page 100

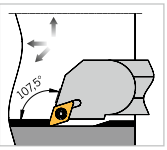

SDQC R/L
Page 101

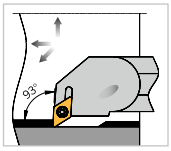

SDUC R/L
Page 102

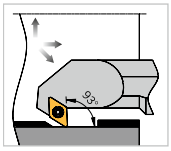

SDXC R/L
Page 103

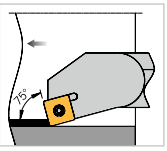

SSKC R/L
Page 104

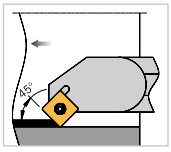

SSSC R/L
Page 105

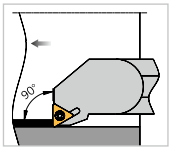

STFC R/L
Page 106/107

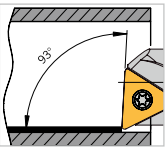

STUC R/L
Page 108

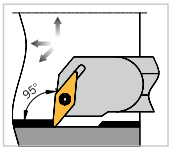

SVLC R/L
Page 109

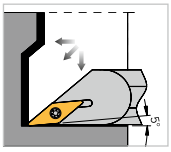

SVOC R/L
Page 110

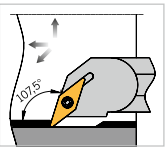

SVQC R/L
Page 111

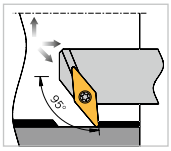

SV95C R/L
Page 112

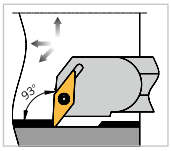

SVUC R/L
Page 113

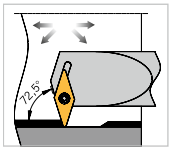

SVVC R/L
Page 114

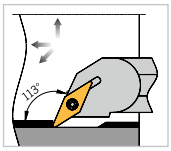

SVXC R/L
Page 115

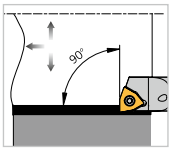

SWFC R/L
Page 116

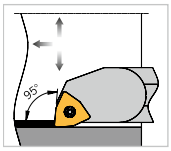

SWLC R/L
Page 117

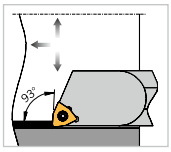

SWUC R/L
Page 118

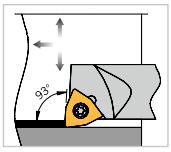

SWUC R/L
Page 119

Torque Screwdriver Set

Page 39

ACKUC R/L Approach angle 93°

ARNO Kofler

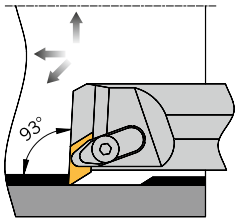

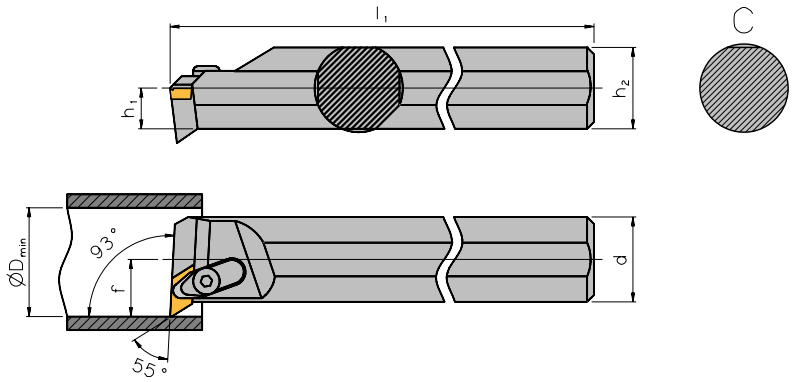

Right hand execution shown

2

Boring Bars - Steel Shank

Designation	d	h_1	h_2	l_1	f	D_{min}	PG	Indexable insert
S12Q ACKUC R/L 11	12	6,0	11,5	180	9	17	**16**	**KCGX 1103..**
S16R ACKUC R/L 11	16	7,5	15,0	200	11	20	**16**	**KCGX 1103..**
S20S ACKUC R/L 11	20	9,5	19,0	250	13	25	**16**	**KCGX 1103..**
S25T ACKUC R/L 11	25	12,0	24,0	300	17	32	**16**	**KCGX 1103..**
S32U ACKUC R/L 11	32	15,5	31,0	350	22	40	**16**	**KCGX 1103..**

Boring Bars - Carbide Shank

Designation	d	h_1	h_2	l_1	f	D_{min}	PG	Indexable insert
C12Q ACKUC R/L 11	12	6,0	11,5	180	9	17	**30**	**KCGX 1103..**
C16R ACKUC R/L 11	16	8,0	15,5	200	11	20	**30**	**KCGX 1103..**
C20S ACKUC R/L 11	20	10,0	19,5	250	13	25	**30**	**KCGX 1103..**
C25T ACKUC R/L 11	25	12,5	24,0	300	17	32	**30**	**KCGX 1103..**

Spare Parts

For boring bar	Clamp	Screw	Support pad	Screw for support pad	Key
.. 12-20.. ACKUC R/L 11	KL 11	S 11	–	–	KS 2520
.. 25-32.. ACKUC R 11	KL 11	S 11	UPL 11 L	UPS	KS 2520
.. 25-32.. ACKUC L 11	KL 11	S 11	UPL 11 R	UPS	KS 2520

CTFP R/L Approach angle 91°

ARNO Kofler

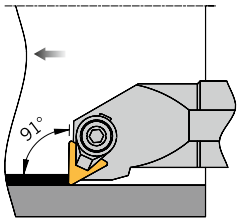

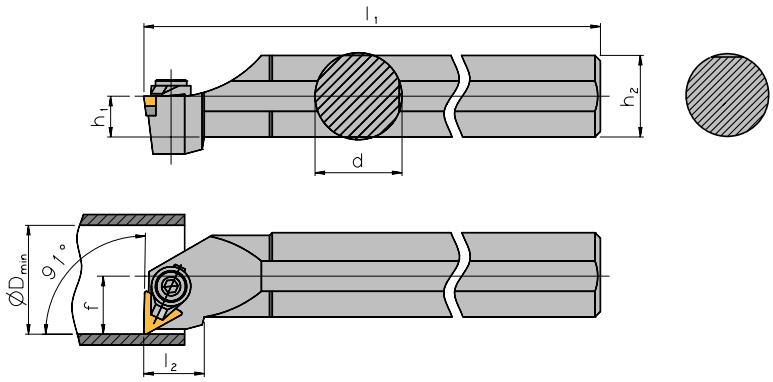

Right hand execution shown

Boring Bars - Steel Shank

Designation	d	h_1	h_2	l_1	l_2	f	D_{min}	PG	Indexable insert
S12Q CTFP R/L 11	12	5,5	11	180	15	9	17,0	8	**TP.. 1103..**
S16R CTFP R/L 11	16	7,5	15	200	15	11	21,0	8	**TP.. 1103..**
S20S CTFP R/L 11	20	9,0	18	250	15	13	25,0	8	**TP.. 1103..**
S25T CTFP R/L 16	25	11,5	23	300	20	17	31,5	8	**TP.. 1603..**
S32U CTFP R/L 16	32	15,0	30	350	20	22	40,0	8	**TP.. 1603..**

Spare Parts

For boring bar	Clamp	Screw	Support pad	Slotted pin	Key
.. 12-20.. CTFP R/L 11	7830001	7830002	–	–	KS 1111
.. 25-35.. CTFP R/L 16	7485865	7485860	7480316	7480901	KS 2520

DCLN R/L Approach angle 95°

ARNO Kofler

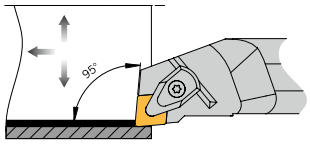

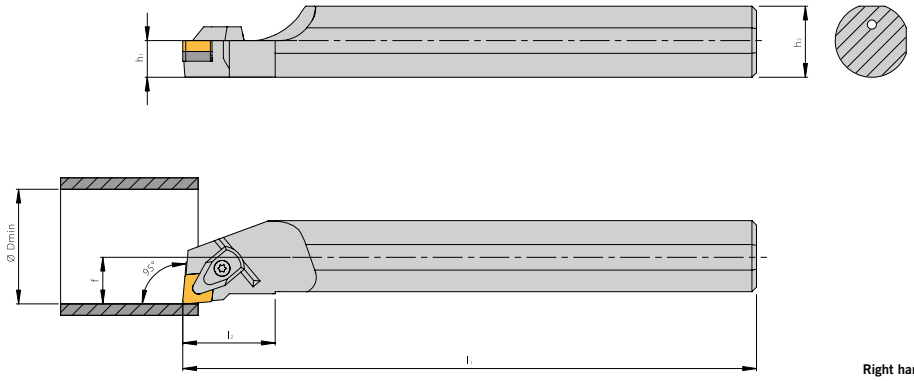

Right hand execution shown

Boring Bars - Steel Shank with Coolant Through

Designation	d	h_1	l_1	l_2	f	D_{min}	PG	Indexable insert
A32S DCLN R/L 12-A	32	31	250	40	22	40	8	**CN.. 1204..**
A40T DCLN R/L 12-A	40	39	300	45	27	50	8	**CN.. 1204..**

Spare Parts

For boring bar	Clamp/Spring/Screw	Support pad	Screw for support pad	Coolant jet
A.. DCLN.. 12-A	KD 2201	U-CN12T3-D	M4,5x10-T15	SPD 1111

DDUN R/L Approach angle 93°

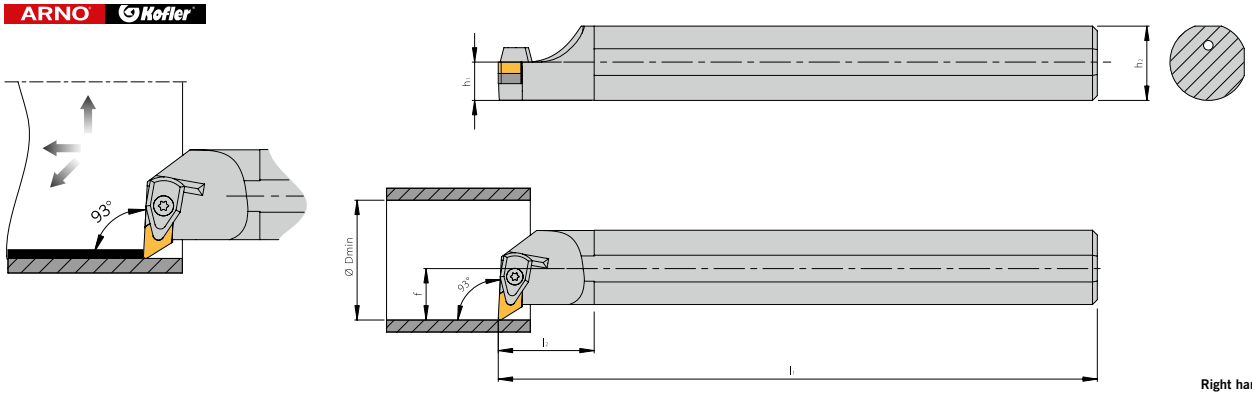

Right hand execution shown

Boring Bars - Steel Shank with Coolant Through

Designation	d	h_1	l_1	l_2	f	D_{min}	PG	Indexable insert
A32S DDUN R/L 11-A	32	31	250	40	22	40	8	**DN.. 1104..**
A40T DDUN R/L 15-A	40	39	300	45	27	50	8	**DN.. 1506..**

Spare Parts

For boring bar	Clamp/Spring/Screw	Support pad	Screw for support pad
A32S DDUN R/L 11-A	KD 1105	U-DN1103-D	M3,0x7-T09
A40T DDUN R/L 15-A	KD 2201	U-DN15T3-D	M4,5x10-T15

DSKN R/L Approach angle 75°

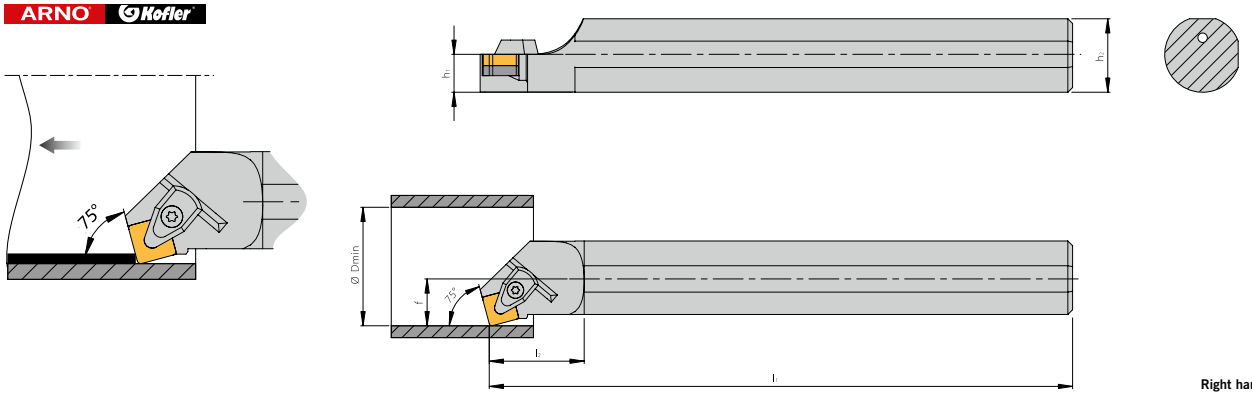

Right hand execution shown

Boring Bars - Steel Shank with Coolant Through

Designation	d	h_1	l_1	l_2	f	D_{min}	PG	Indexable insert
A32S DSKN R/L 12-A	32	31	250	40	22	40	8	**SN.. 1204..**

Spare Parts

For boring bar	Clamp/Spring/Screw	Support pad	Screw for support pad
A32S DSKN R/L 12-A	KD 2201	U-SN12T3-D	M4,5x10-T15

DWLN R/L Approach angle 95°

ARNO Kofler

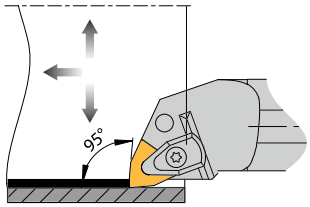

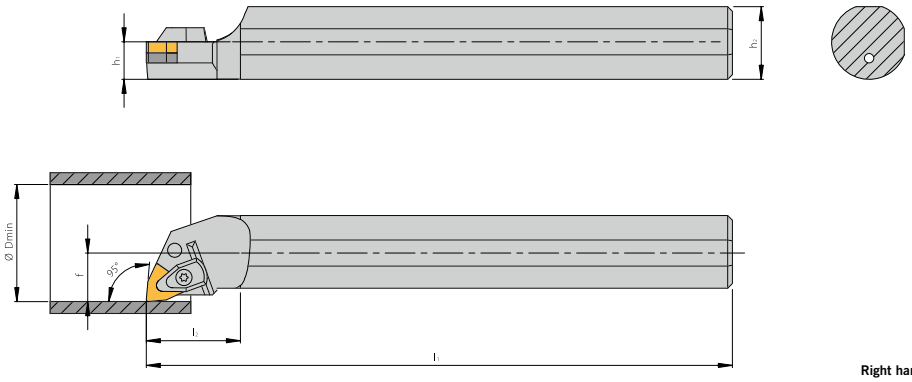

Right hand execution shown

Boring Bars - Steel Shank with Coolant Through

Designation	d	h_1	l_1	l_2	f	D_{min}	PG	Indexable insert
A25R DWLN R/L 06-A	25	24	200	32	17	32	8	WN.. 0604..
A32S DWLN R/L 08-A	32	31	250	40	22	40	8	WN.. 0804..
A40T DWLN R/L 08-A	40	39	300	45	27	50	8	WN.. 0804..

Spare Parts

For boring bar	Clamp/Spring/Screw	Support pad	Screw for support pad	Coolant jet
A.. DWLN.. 06-A	KD 1105	U-WN0603-D	M3,0x7-T09	SPD 1111
A.. DWLN.. 08-A	KD 2201	U-WN08T3-D	M4,5x10-T15	SPD 1111

MCLC R/L Approach angle 95°

ARNO Kofler

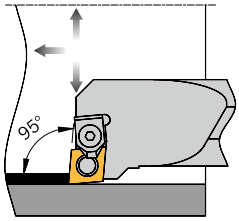

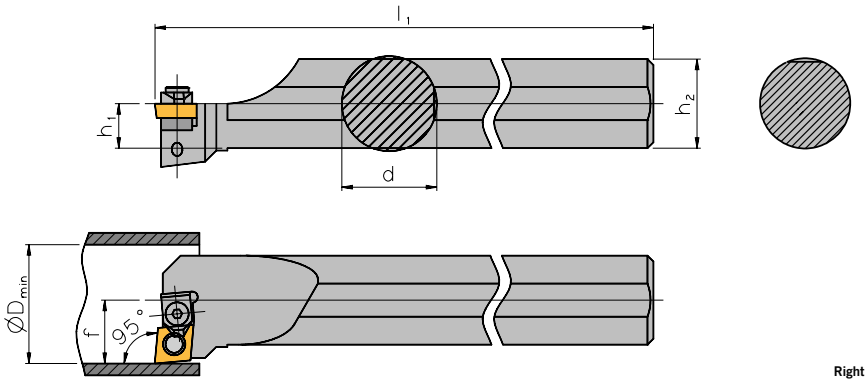

Right hand execution shown

Boring Bars - Steel Shank

Designation	d	h_1	h_2	l_1	f	D_{min}	PG	Indexable insert
S25R MCLC R/L 12	25	11,5	23	200	17	34	8	CCMX 1204..
S32S MCLC R/L 12	32	15,0	30	250	22	40	8	CCMX 1204..

Spare Parts

For boring bar	Clamp ❶	Wedge	Support pad	Pin	Key
.. MCLC R/L 12	7880608	7880103	7880007	7880407	KS 2520

❶ with screw and lock washer

MSSC R/L Approach angle 45°

ARNO Kofler

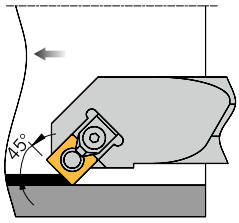

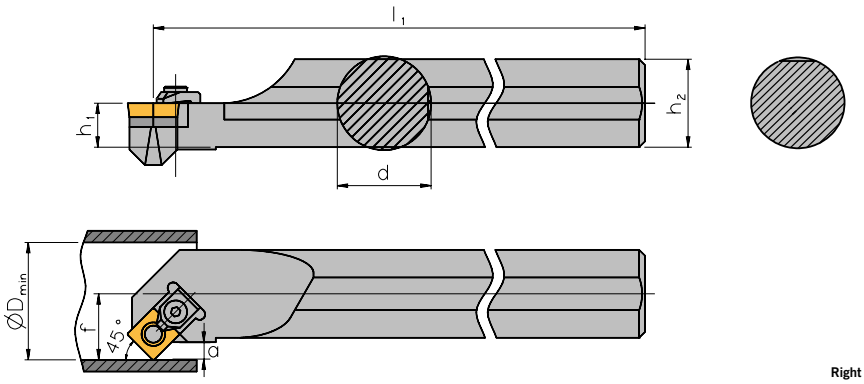

Right hand execution shown

2

Boring Bars - Steel Shank

Designation	d	h_1	h_2	l_1	f	a	D_{min}	PG	Indexable insert
S25R MSSC R/L 12	25	11,5	23	200	17	4,4	34	8	**SCMX 1204..**
S32S MSSC R/L 12	32	15,0	30	250	22	5,9	44	8	**SCMX 1204..**

Spare Parts

For boring bar	Clamp ❶	Wedge	Support pad	Pin	Key
.. MSSC R/L 12	7880608	7880103	7880010	7880407	KS 2520

❶ with screw and lock washer

MTUC R/L Approach angle 93°

ARNO Kofler

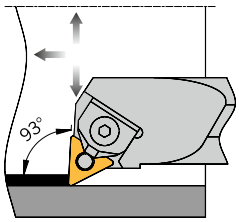

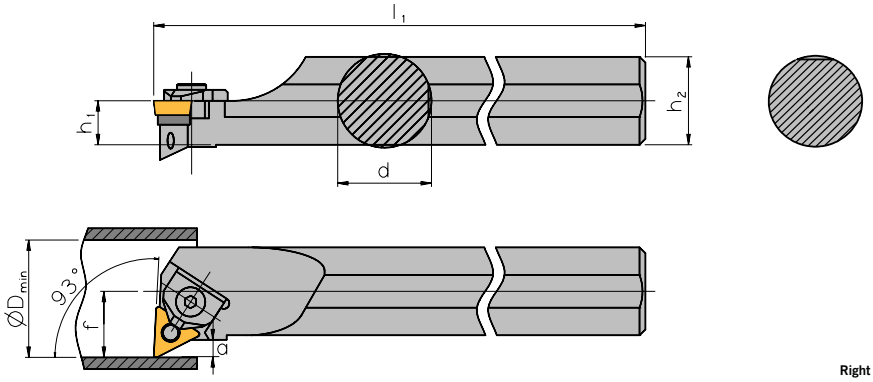

Right hand execution shown

Boring Bars - Steel Shank

Designation	d	h_1	h_2	l_1	f	a	D_{min}	PG	Indexable insert
S25R MTUC R/L 16	25	11,5	23	200	17	4,4	34	8	**TCMX 1604..**
S32S MTUC R/L 16	32	15,0	30	250	22	5,9	44	8	**TCMX 1604..**
S40T MTUC R/L 16	40	18,0	36	300	27	6,9	54	8	**TCMX 1604..**

Spare Parts

For boring bar	Clamp ❶	Wedge	Support pad	Pin	Key
.. MTUC R/L 16	7880606	7880101	7880008	7880408	KS 2520

❶ with screw and lock washer

PCLN R/L Approach angle 95°

ARNO Kofler

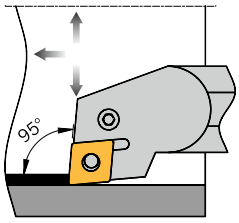

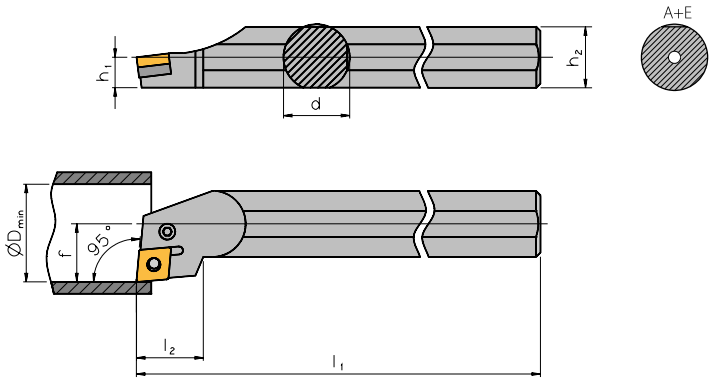

Right hand execution shown

Boring Bars - Steel Shank

Designation	d	h_1	h_2	l_1	l_2	f	D_{min}	PG	Indexable insert
S16R PCLN R/L 09	16	7,5	16	200	21,0	11	20	8	CN.. 0903..
S20S PCLN R/L 09	20	9,0	18	250	21,0	13	25	8	CN.. 0903..
S25T PCLN R/L 09	25	11,5	23	300	21,0	17	32	8	CN.. 0903..
S25T PCLN R/L 12	25	11,5	23	300	22,0	17	32	8	CN.. 1204..
S32U PCLN R/L 12	32	15,0	30	350	24,1	22	40	8	CN.. 1204..
S40V PCLN R/L 12	40	18,5	37	400	24,1	27	49	8	CN.. 1204..
S50W PCLN R/L 16	50	23,5	47	450	31,0	35	62	8	CN.. 1606..

Boring Bars - Steel Shank with Coolant Through

Designation	d	h_1	h_2	l_1	l_2	f	D_{min}	PG	Indexable insert
A16M PCLN R/L 09	16	8,0	15,5	150	21,0	11	20	8	CN.. 0903..
A20Q PCLN R/L 09	20	10,0	19,0	180	21,0	13	25	8	CN.. 0903..
A25R PCLN R/L 09	25	12,5	24,0	200	21,0	17	32	8	CN.. 0903..
A25R PCLN R/L 12	25	12,5	24,0	200	21,0	17	32	8	CN.. 1204..
A32S PCLN R/L 12	32	16,0	31,0	250	24,1	22	40	8	CN.. 1204..
A40T PCLN R/L 12	40	20,0	38,5	300	24,1	27	49	8	CN.. 1204..

Boring Bars - Carbide Shank with Coolant Through

Designation	d	h_1	h_2	l_1	l_2	f	D_{min}	PG	Indexable insert
E32U PCLN R/L 12	32	16	31	350	24,1	22	40	30	CN.. 1204..

Spare Parts

For boring bar	1 Support pad	2 Lever	3 Clamping screw	4 Shim pin	Shim pin punch	Key	Spare part set 1-4
.. 16.. PCLN R/L 09	–	HP 1118	SP 1118	–	–	KP 3421	P 1113
.. 20.. PCLN R/L 09	–	HP 1118	SP 1118	–	–	KP 3421	P 1113
.. 25.. PCLN R/L 09	UP 1115	HP 4751	SP 3111	RP 3112	MP 3111	KP 3111	P 1112
.. 25.. PCLN R/L 12	UP 1111	HP 1111	SP 1114	RP 1111	MP 1111	KP 1111	P 1114
.. 32-40.. PCLN R/L 12	UP 1111	HP 1111	SP 1111	RP 1111	MP 1111	KP 1111	P 1111
.. 50.. PCLN R/L 16	UP 1221	HP 1221	SP 1221	RP 1221	MP 1221	KP 1111	P 1221

PDUN R/L Approach angle 93°

ARNO Kofler

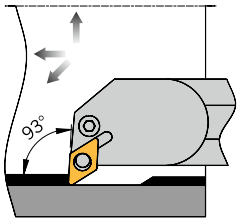

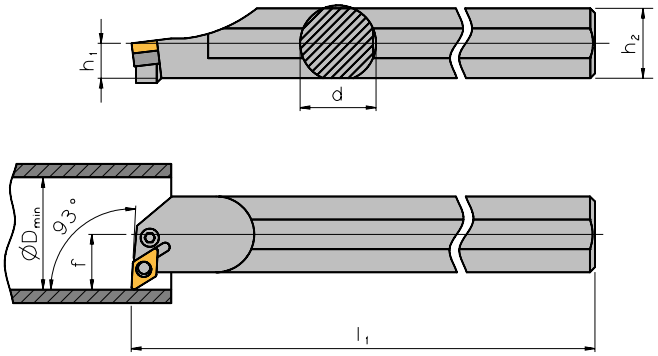

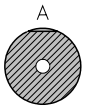

Right hand execution shown

2

Boring Bars - Steel Shank

Designation	d	h_1	h_2	l_1	f	D_{min}	PG	Indexable insert
S20S PDUN R/L 11	20	9,0	18	250	16,0	27	8	**DN.. 1104..**
S25T PDUN R/L 11	25	11,5	23	300	18,5	32	8	**DN.. 1104..**
S32U PDUN R/L 11	32	15,0	30	350	22,0	40	8	**DN.. 1104..**
S32U PDUN R/L 15	32	15,0	30	350	22,0	40	8	**DN.. 1506..**
S40V PDUN R/L 15	40	18,5	37	400	27,0	49	8	**DN.. 1506..**
S50W PDUN R/L 15	50	23,5	47	450	35,0	62	8	**DN.. 1506..**

Boring Bars - Steel Shank with Coolant Through

Designation	d	h_1	h_2	l_1	f	D_{min}	PG	Indexable insert
A20Q PDUN R/L 11	20	10,0	19,0	180	16,0	27	8	**DN.. 1104..**
A25R PDUN R/L 11	25	12,5	24,0	200	18,5	32	8	**DN.. 1104..**
A32S PDUN R/L 11	32	16,0	31,0	250	22,0	40	8	**DN.. 1104..**
A32S PDUN R/L 15	32	16,0	31,0	250	22,0	40	8	**DN.. 1506..**
A40T PDUN R/L 15	40	20,0	38,5	300	27,0	49	8	**DN.. 1506..**

Remark: A-execution with cylindrical part at the end of the shank

Spare Parts

For boring bar	1 Support pad	2 Lever	3 Clamping screw	4 Shim pin	Shim pin punch	Key	Spare part set 1-4
.. 20.. PDUN R/L 11	–	HP 2012	SP 3112	–	–	KP 3111	P 2012
.. 25-32.. PDUN R/L 11	UP 2011	HP 2011	SP 3111	RP 3112	MP 3111	KP 3111	P 2011
.. 32-50.. PDUN R/L 15	UP 2421	HP 2421	SP 1111	RP 1111	MP 1111	KP 1111	P 2421

Dimensions in mm

PSKN R/L Approach angle 75°

ARNO Kofler

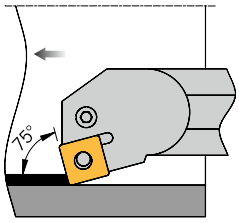

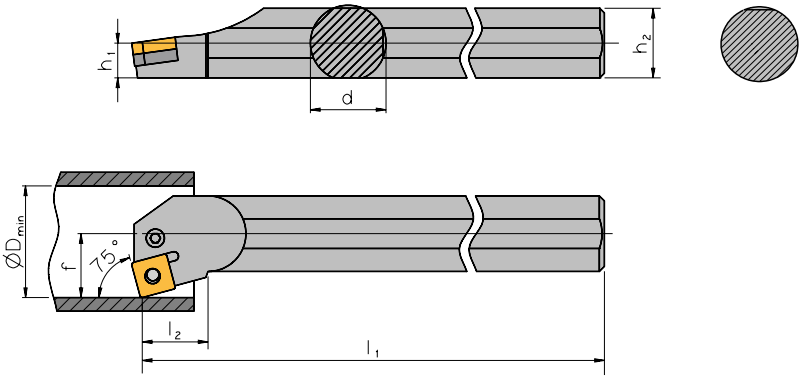

Right hand execution shown

Boring Bars - Steel Shank

Designation	d	h_1	h_2	l_1	l_2	f	D_{min}	PG	Indexable insert
S25T PSKN R/L 12	25	11,5	23	300	15,5	17	32	**8**	**SN.. 1204..**
S32U PSKN R/L 12	32	15,0	30	350	16,0	22	40	**8**	**SN.. 1204..**
S40V PSKN R/L 12	40	18,5	37	400	23,0	27	49	**8**	**SN.. 1204..**

Spare Parts

For boring bar	1 Support pad	2 Lever	3 Clamping screw	4 Shim pin	Shim pin punch	Key	Spare part set 1-4
.. 25-32.. PSKN R/L 12	UP 5112	HP 1111	SP 1114	RP 1111	MP 1111	KP 1111	P 1115
.. 40.. PSKN R/L 12	UP 5112	HP 1111	SP 1111	RP 1111	MP 1111	KP 1111	P 5112

PTFN R/L Approach angle 90°

ARNO Kofler

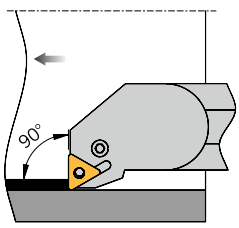

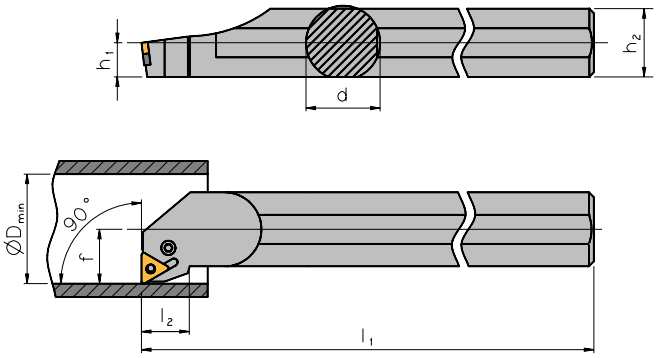

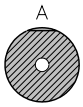

Right hand execution shown

2

Boring Bars - Steel Shank

Designation	d	h_1	h_2	l_1	l_2	f	D_{min}	PG	Indexable insert
S16R PTFN R/L 11	16	7,5	15	200	14,0	11	20	8	TN.. 1103..
S20S PTFN R/L 11	20	9,0	18	250	14,0	13	25	8	TN.. 1103..
S25T PTFN R/L 16	25	11,5	23	300	17,5	17	32	8	TN.. 1604..
S32U PTFN R/L 16	32	15,0	30	350	18,0	22	40	8	TN.. 1604..
S40V PTFN R/L 22	40	18,5	37	400	27,0	27	49	8	TN.. 2204..
S50W PTFN R/L 22	50	23,5	47	450	35,0	35	62	8	TN.. 2204..

Boring Bars - Steel Shank with Coolant Through

Designation	d	h_1	h_2	l_1	l_2	f	D_{min}	PG	Indexable insert
A16M PTFN R/L 11	16	8,0	15,5	150	14,0	11	20	8	TN.. 1103..
A20Q PTFN R/L 11	20	10,0	19,0	180	14,0	13	25	8	TN.. 1103..
A25R PTFN R/L 16	25	12,5	24,0	200	17,5	17	32	8	TN.. 1604..
A32S PTFN R/L 16	32	16,0	31,0	250	18,0	22	40	8	TN.. 1604..

Remark: A-execution with cylindrical part at the end of the shank

Spare Parts

For boring bar	1 Support pad	2 Lever	3 Clamping screw	4 Shim pin	Shim pin punch	Key	Spare part set 1-4
.. 16-20.. PTFN R/L 11	–	HP 6051	SP 5751	–	–	KP 3421	P 6051
.. 25-32.. PTFN R/L 16	UP 6211	HP 4751	SP 3111	RP 3112	MP 3111	KP 3111	P 6211
.. 40-50.. PTFN R/L 22	UP 6811	HP 1111	SP 1111	RP 1111	MP 1111	KP 1111	P 6811

PWLN R/L Approach angle 95°

ARNO Kofler

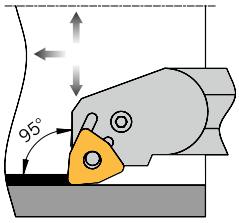

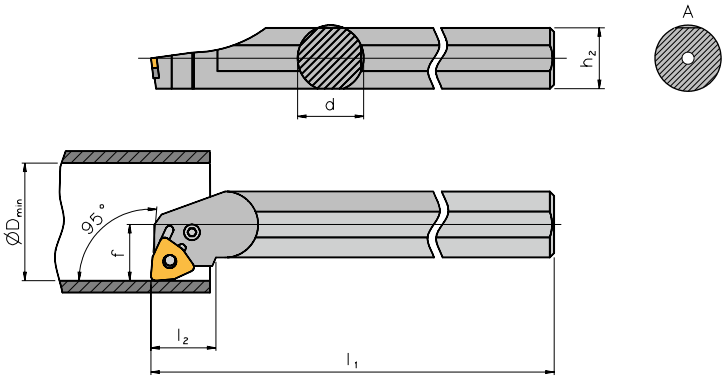

Right hand execution shown

Boring Bars - Steel Shank

Designation	d	h_2	l_1	l_2	f	D_{min}	PG	Indexable insert
S20S PWLN R/L 06	20	18	250	19,5	13	25	8	**WN.. 0604..**
S25T PWLN R/L 06	25	23	300	19,5	17	32	8	**WN.. 0604..**
S32U PWLN R/L 06	32	30	350	19,5	22	40	8	**WN.. 0604..**
S32U PWLN R/L 08	32	30	350	26,0	22	40	8	**WN.. 0804..**
S40V PWLN R/L 08	40	37	400	26,0	27	49	8	**WN.. 0804..**

Boring Bars - Steel Shank with Coolant Through

Designation	d	h_2	l_1	l_2	f	D_{min}	PG	Indexable insert
A16M PWLN R/L 06	16	15,5	150	17,5	11	21	8	**WN.. 0604..**
A20Q PWLN R/L 06	20	19,0	180	19,5	13	25	8	**WN.. 0604..**
A25R PWLN R/L 06	25	24,0	200	19,5	17	32	8	**WN.. 0604..**
A32S PWLN R/L 06	32	31,0	250	19,5	22	40	8	**WN.. 0604..**
A32S PWLN R/L 08	32	31,0	250	26,0	22	40	8	**WN.. 0804..**
A40T PWLN R/L 08	40	39,0	300	26,0	27	49	8	**WN.. 0804..**

Remark: A-execution with cylindrical part at the end of the shank

Spare Parts

For boring bar	1 Support pad	2 Lever	3 Clamping screw	4 Shim pin	Shim pin punch	Key	Spare part set 1-4
.. 16-20.. PWLN R/L 06	–	HP 4753	SP 3113	–	–	KP 3421	P 71111
.. 25-32.. PWLN R/L 06	UP 71111	HP 4751	SP 3111	RP 3112	MP 3111	KP 3111	P 71112
.. 32-40.. PWLN R/L 08	UP 71011	HP 1111	SP 1111	RP 1111	MP 1111	KP 1111	P 71011

SCFC R/L Approach angle 90°

ARNO Kofler

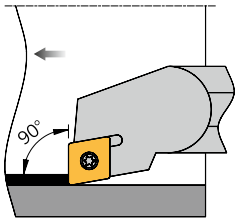

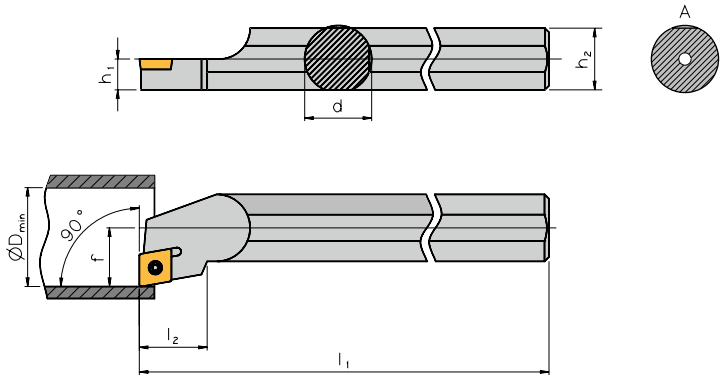

Right hand execution shown

2

Boring Bars - Steel Shank

Designation	d	h_1	h_2	l_1	l_2	f	D_{min}	PG	Indexable insert
S08H SCFC R/L 06	8	3,5	7	100	–	5	11	8	**CC.. 0602..**
S10K SCFC R/L 06	10	4,5	9	125	9	7	14	8	**CC.. 0602..**
S12Q SCFC R/L 06	12	5,5	11	180	14	9	17	8	**CC.. 0602..**

Boring Bars - Steel Shank with Coolant Through

Designation	d	h_1	h_2	l_1	l_2	f	D_{min}	PG	Indexable insert
A08F SCFC R/L 06	8	4	7,5	80	–	5	11	8	**CC.. 0602..**
A10H SCFC R/L 06	10	5	9,5	100	9	7	14	8	**CC.. 0602..**
A12K SCFC R/L 06	12	6	11,5	125	14	9	17	8	**CC.. 0602..**

Remark: A-execution with cylindrical part at the end of the shank

Spare Parts

For boring bar	Screw	Key	Spare part set ❹
.. 08-12.. SCFC R/L 06	SS 1754	KS 1751	S 1754

❹ Spare part set consists of: 3 screws + 1 key

SCFC R/L Approach angle 90°

ARNO Kofler

CNC Auto Lathes

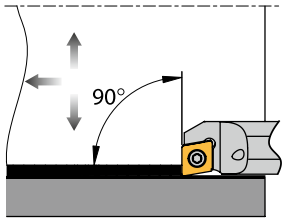

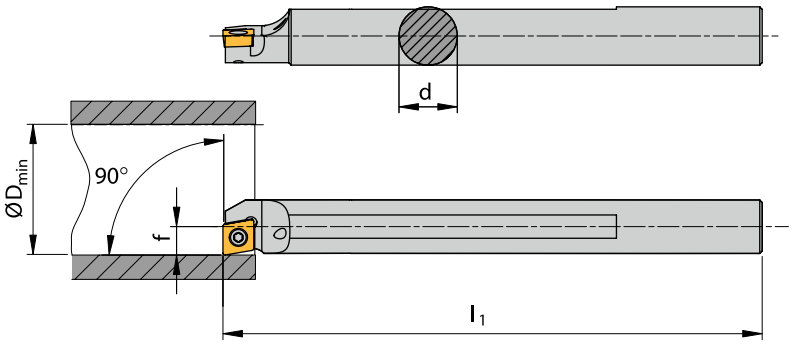

Right hand execution shown

Boring Bars - Steel Shank with Coolant Through

Designation	d	l_1	f	D_{min}	PG	Indexable insert
A08F SCFC R/L 06-A	8	80	4,3	8,4	8	CC.. 0602..
A10H SCFC R/L 06-A	10	100	5,3	10,4	8	CC.. 0602..
A12K SCFC R/L 06-A	12	125	6,3	12,5	8	CC.. 0602..
A16M SCFC R/L 09-A	16	150	8,8	16,5	8	CC.. 09T3..

Remark: A-execution with cylindrical part at the end of the shank

Boring Bars - Carbide Shank with Coolant Through

Designation	d	l_1	f	D_{min}	PG	Indexable insert
E08H SCFC R/L 06-A	8	100	4,3	8,4	30	CC.. 0602..
E10K SCFC R/L 06-A	10	125	5,3	10,4	30	CC.. 0602..
E12Q SCFC R/L 06-A	12	180	6,3	12,5	30	CC.. 0602..
E16R SCFC R/L 09-A	16	200	8,8	16,5	30	CC.. 09T3..

Spare Parts

For boring bar	Screw	Key	Spare part set ❹
.. 08-12.. SCFC R/L 06-A	SS 1754	KS 1751	S 1754
.. 16.. SCFC R/L 09-A	SS 1114	KS 1111	S 1114

❹ Spare part set consists of: 3 screws + 1 key

SCLC R/L Approach angle 95°

ARNO Kofler

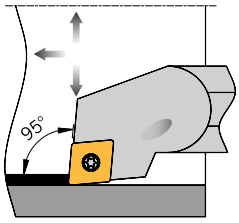

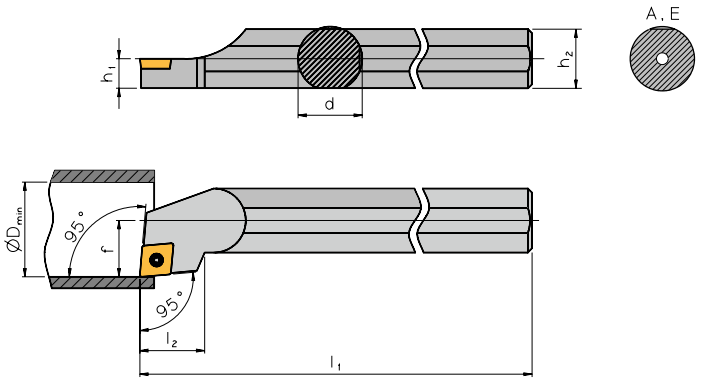

Right hand execution shown

2

Boring Bars - Steel Shank

Designation	d	h_1	h_2	l_1	l_2	f	D_{min}	PG	Indexable insert
S08H SCLC R/L 06	8	3,5	7	100	–	5	11,0	8	CC.. 0602..
S10K SCLC R/L 06	10	4,5	9	125	10	7	13,0	8	CC.. 0602..
S12Q SCLC R/L 06	12	5,5	11	180	10	9	16,0	8	CC.. 0602..
S16R SCLC R/L 09	16	7,5	15	200	16	11	20,0	8	CC.. 09T3..
S20S SCLC R/L 09	20	9,0	18	250	16	13	25,0	8	CC.. 09T3..
S25T SCLC R/L 09	25	11,5	23	300	16	17	31,5	8	CC.. 09T3..
S32U SCLC R/L 12	32	15,0	30	350	22	22	40,0	8	CC.. 1204..
S40V SCLC R/L 12	40	18,5	37	400	22	27	49,0	8	CC.. 1204..

Boring Bars - Steel Shank with Coolant Through

Designation	d	h_1	h_2	l_1	l_2	f	D_{min}	PG	Indexable insert
A08F SCLC R/L 06	8	4,0	7,5	80	–	5	11,0	8	CC.. 0602..
A10H SCLC R/L 06	10	5,0	9,5	100	10	7	13,0	8	CC.. 0602..
A12K SCLC R/L 06	12	6,0	11,5	125	10	9	16,0	8	CC.. 0602..
A16M SCLC R/L 09	16	8,0	15,5	150	16	11	20,0	8	CC.. 09T3..
A20Q SCLC R/L 09	20	10,0	19,0	180	16	13	25,0	8	CC.. 09T3..
A25R SCLC R/L 09	25	12,5	24,0	200	16	17	31,5	8	CC.. 09T3..
A32S SCLC R/L 12	32	16,0	31,0	250	22	22	40,0	8	CC.. 1204..
A40T SCLC R/L 12	40	20,0	38,5	300	22	27	49,0	8	CC.. 1204..

Remark: A-execution with cylindrical part at the end of the shank

Boring Bars - Carbide Shank with Coolant Through

Designation	d	h_1	h_2	l_1	l_2	f	D_{min}	PG	Indexable insert
E08H SCLC R/L 06	8	4,0	7,5	100	–	5	11,0	30	CC.. 0602..
E10K SCLC R/L 06	10	5,0	9,5	125	10	7	14,0	30	CC.. 0602..
E12Q SCLC R/L 06	12	6,0	11,5	180	10	9	17,0	30	CC.. 0602..
E16R SCLC R/L 09	16	8,0	15,5	200	16	11	21,0	30	CC.. 09T3..
E20S SCLC R/L 09	20	10,0	19,0	250	16	13	25,0	30	CC.. 09T3..
E25T SCLC R/L 09	25	12,5	24,0	300	16	17	31,5	30	CC.. 09T3..
E32U SCLC R/L 12	32	16,0	31,0	350	22	22	40,0	30	CC.. 1204..

Spare Parts

For boring bar	Support pad	Bushing	Screw	Key	Spare part set ❹
.. 08-12.. SCLC R/L 06	–	–	SS 1754	KS 1751	S 1754
.. 16-20.. SCLC R/L 09	–	–	SS 1114	KS 1111	S 2314
.. 25.. SCLC R/L 09	–	–	SS 1111	KS 1111	S 1111
.. 32-40.. SCLC R/L 12	US 1221	GBS 1221-K	SS 1221	KS 1115	S 1221

❹ Spare part set consists of: 3 screws + 1 key. Depending on type of toolholder also 1 support pad + 1 bushing

Dimensions in mm

SCLD R/L Approach angle 95°

ARNO Kofler

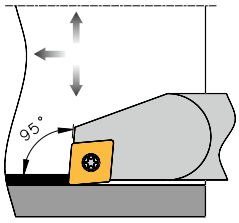

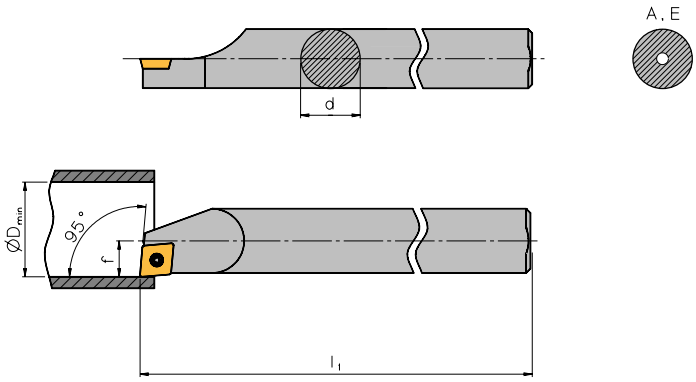

Right hand execution shown

Boring Bars - Steel Shank

Designation	d	l_1	f	D_{min}	PG	Indexable insert
S04E SCLD R/L 04	4	70	2,4	4,8	8	CD.. 0401..
S05E SCLD R/L 04	5	70	2,9	5,8	8	CD.. 0401..
S06F SCLD R/L 04	6	80	3,4	6,8	8	CD.. 0401..

Boring Bars - Steel Shank with Coolant Through

Designation	d	l_1	f	D_{min}	PG	Indexable insert
A04E SCLD R/L 04	4	70	2,4	4,8	8	CD.. 0401..
A05E SCLD R/L 04	5	70	2,9	5,8	8	CD.. 0401..
A06F SCLD R/L 04	6	80	3,4	6,8	8	CD.. 0401..

Boring Bars - Carbide Shank with Coolant Through

Designation	d	l_1	f	D_{min}	PG	Indexable insert
E04F SCLD R/L 04	4	80	2,4	4,8	30	CD.. 0401..
E05F SCLD R/L 04	5	80	2,9	5,8	30	CD.. 0401..
E06G SCLD R/L 04	6	95	3,4	6,8	30	CD.. 0401..

Spare Parts

For boring bar	Screw	Key
.. SCLD R/L 04	T 1,8.03	KS 1886

SCLD R/L Approach angle 95°

ARNO Kofler

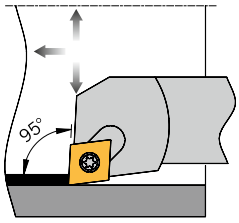

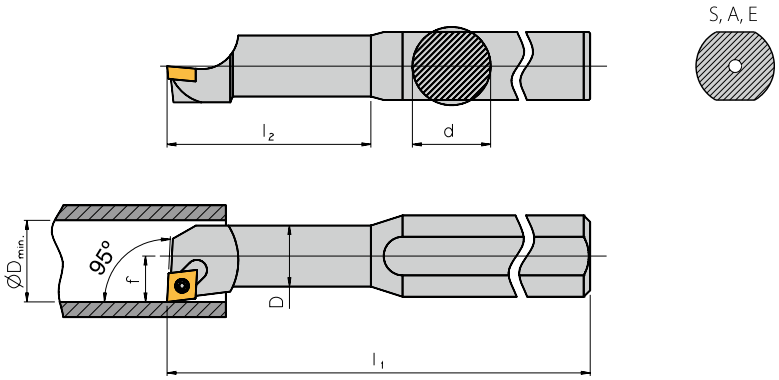

Right hand execution shown

2

Boring Bars - Recessed Steel Shank

Designation	d	D	l_1	l_2	f	D_{min}	PG	Indexable insert
S0408H SCLD R/L 04	8	4	100	16	2,4	4,8	8	CD.. 0401..
S0508H SCLD R/L 04	8	5	100	20	2,9	5,8	8	CD.. 0401..
S0608H SCLD R/L 04	8	6	100	24	3,4	6,8	8	CD.. 0401..

Boring Bars - Recessed Steel Shank with Coolant Through

Designation	d	D	l_1	l_2	f	D_{min}	PG	Indexable insert
A0408H SCLD R/L 04	8	4	100	16	2,4	4,8	8	CD.. 0401..
A0508H SCLD R/L 04	8	5	100	20	2,9	5,8	8	CD.. 0401..
A0608H SCLD R/L 04	8	6	100	24	3,4	6,8	8	CD.. 0401..

Boring Bars - Recessed Carbide Shank with Coolant Through

Designation	d	D	l_1	l_2	f	D_{min}	PG	Indexable insert
E0408H SCLD R/L 04	8	4	100	24	2,4	4,8	30	CD.. 0401..
E0508H SCLD R/L 04	8	5	100	30	2,9	5,8	30	CD.. 0401..
E0608H SCLD R/L 04	8	6	100	36	3,4	6,8	30	CD.. 0401..

Spare Parts

For boring bar	Screw	Key
.. SCLD R/L 04	T1,8.03	KS 2505

SCUP R/L Approach angle 93°

ARNO Kofler

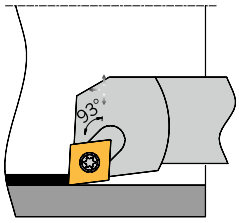

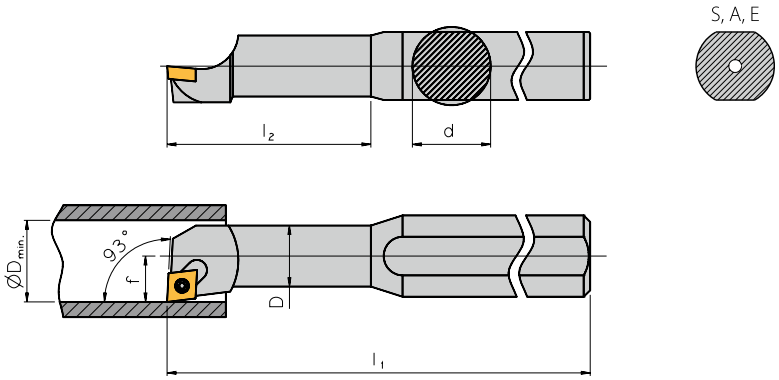

Right hand execution shown

Boring Bars - Recessed Steel Shank

Designation	d	D	l_1	l_2	f	D_{min}	PG	Indexable insert
S0608H SCUP R/L 05	8	6	100	20	4,5	8	8	CP.. 05T1..
S0810J SCUP R/L 05	10	8	110	26	6,0	11	8	CP.. 05T1..
S1012K SCUP R/L 05	12	10	125	32	7,0	13	8	CP.. 05T1..
S1216M SCUP R/L 05	16	12	150	40	9,0	16	8	CP.. 05T1..

Boring Bars - Recessed Steel Shank with Coolant Through

Designation	d	D	l_1	l_2	f	D_{min}	PG	Indexable insert
A0608H SCUP R/L 05	8	6	100	20	4,5	8	8	CP.. 05T1..
A0810J SCUP R/L 05	10	8	110	26	6,0	11	8	CP.. 05T1..
A1012K SCUP R/L 05	12	10	125	32	7,0	13	8	CP.. 05T1..
A1216M SCUP R/L 05	16	12	150	40	9,0	16	8	CP.. 05T1..

Boring Bars - Recessed Carbide Shank with Coolant Through

Designation	d	D	l_1	l_2	f	D_{min}	PG	Indexable insert
E0608H SCUP R/L 05	8	6	100	28	4,5	8	30	CP.. 05T1..
E0810J SCUP R/L 05	10	8	110	36	6,0	11	30	CP.. 05T1..
E1012K SCUP R/L 05	12	10	125	44	7,0	13	30	CP.. 05T1..
E1216M SCUP R/L 05	16	12	150	55	9,0	16	30	CP.. 05T1..

Spare Parts

For boring bar	Screw	Key
.. SCUP R/L 05	T2,2.04	KS 5151

SCXP R/L Approach angle 40°

ARNO Kofler

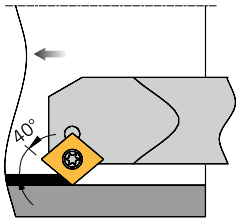

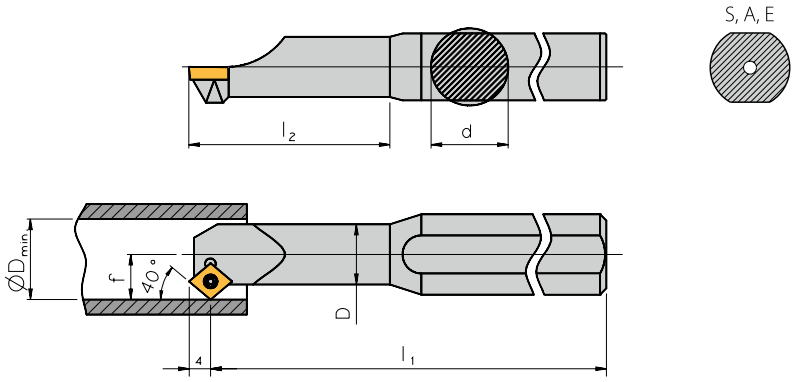

Right hand execution shown

2

Boring Bars - Recessed Steel Shank

Designation	d	D	l_1	l_2	f	D_{min}	PG	Indexable insert
S0608H SCXP R/L 05	8	6	100	20	4,5	8,5	8	CP.. 05T1..
S0810J SCXP R/L 05	10	8	110	26	6,0	11,0	8	CP.. 05T1..
S1012K SCXP R/L 05	12	10	125	32	7,0	13,0	8	CP.. 05T1..
S1216M SCXP R/L 05	16	12	150	40	9,0	16,0	8	CP.. 05T1..

Boring Bars - Recessed Steel Shank with Coolant Through

Designation	d	D	l_1	l_2	f	D_{min}	PG	Indexable insert
A0608H SCXP R/L 05	8	6	100	20	4,5	8,5	8	CP.. 05T1..
A0810J SCXP R/L 05	10	8	110	26	6,0	11,0	8	CP.. 05T1..
A1012K SCXP R/L 05	12	10	125	32	7,0	13,0	8	CP.. 05T1..
A1216M SCXP R/L 05	16	12	150	40	9,0	16,0	8	CP.. 05T1..

Boring Bars - Recessed Carbide Shank with Coolant Through

Designation	d	D	l_1	l_2	f	D_{min}	PG	Indexable insert
E0608H SCXP R/L 05	8	6	100	28	4,5	8,5	30	CP.. 05T1..
E0810J SCXP R/L 05	10	8	110	36	6,0	11,0	30	CP.. 05T1..
E1012K SCXP R/L 05	12	10	125	44	7,0	13,0	30	CP.. 05T1..
E1216M SCXP R/L 05	16	12	150	55	9,0	16,0	30	CP.. 05T1..

Spare Parts

For boring bar	Screw	Key
.. SCXP R/L 05	T2,2.04	KS 5151

SDQC R/L Approach angle 107,5°

ARNO Kofler

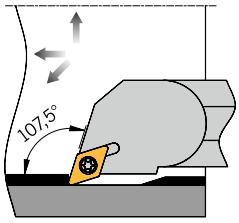

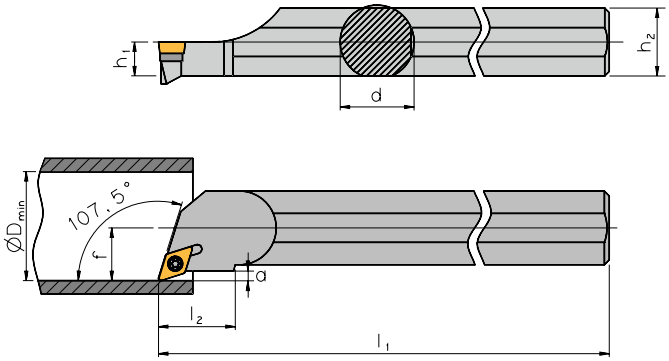

Right hand execution shown

Boring Bars - Steel Shank

Designation	d	h_1	h_2	l_1	l_2	f	a	D_{min}	PG	Indexable insert
S10K SDQC R/L 07	10	4,5	9	125	10,0	7	2,4	14,0	8	DC.. 0702..
S12Q SDQC R/L 07	12	5,5	11	180	12,5	9	2,9	17,0	8	DC.. 0702..
S16R SDQC R/L 07	16	7,5	15	200	16,5	11	2,9	21,0	8	DC.. 0702..
S20S SDQC R/L 07	20	9,0	18	250	20,5	13	2,9	25,0	8	DC.. 0702..
S25T SDQC R/L 11	25	11,5	23	300	26,5	17	4,4	31,5	8	DC.. 11T3..
S32U SDQC R/L 11	32	15,0	30	350	33,5	22	6,0	40,0	8	DC.. 11T3..
S40V SDQC R/L 11	40	18,5	37	400	41,5	27	6,9	49,0	8	DC.. 11T3..

Boring Bars - Steel Shank with Coolant Through

Designation	d	h_1	h_2	l_1	l_2	f	a	D_{min}	PG	Indexable insert
A10H SDQC R/L 07	10	4,5	9,0	100	10,0	7	2,4	14,0	8	DC.. 0702..
A12K SDQC R/L 07	12	6,0	11,5	125	12,5	9	2,9	17,0	8	DC.. 0702..
A16M SDQC R/L 07	16	8,0	15,5	150	16,5	11	2,9	21,0	8	DC.. 0702..
A20Q SDQC R/L 07	20	10,0	19,0	180	20,5	13	2,9	25,0	8	DC.. 0702..
A25R SDQC R/L 11	25	12,5	24,0	200	26,5	17	4,4	31,5	8	DC.. 11T3..
A32S SDQC R/L 11	32	16,0	31,0	250	33,5	22	6,0	40,0	8	DC.. 11T3..
A40T SDQC R/L 11	40	20,0	38,5	300	41,5	27	6,9	49,0	8	DC.. 11T3..

Remark: A-execution with cylindrical part at the end of the shank

Boring Bars - Carbide Shank with Coolant Through

Designation	d	h_1	h_2	l_1	l_2	f	a	D_{min}	PG	Indexable insert
E10K SDQC R/L 07	10	5,0	9,5	125	10,0	7	2,4	14,0	30	DC.. 0702..
E12Q SDQC R/L 07	12	6,0	11,5	180	12,5	9	2,9	17,0	30	DC.. 0702..
E16R SDQC R/L 07	16	8,0	15,5	200	16,5	11	2,9	21,0	30	DC.. 0702..
E20S SDQC R/L 07	20	10,0	19,0	250	20,5	13	2,9	25,0	30	DC.. 0702..
E20S SDQC R/L 11	20	10,0	19,0	250	20,5	13	2,9	25,0	30	DC.. 11T3..
E25T SDQC R/L 11	25	12,5	24,0	300	26,5	17	4,4	31,5	30	DC.. 11T3..

Spare Parts

For boring bar	Support pad	Bushing	Screw	Key	Spare part set ❹
.. 10-20.. SDQC R/L 07	–	–	SS 1751	KS 1751	S 1751
.. 20-40.. SDQC R/L 11	US 2311	GBS 1111	SS 1111	KS 1115	S 2316

❹ Spare part set consists of: 3 screws + 1 key. Depending on type of toolholder also 1 support pad + 1 bushing

SDUC R/L Approach angle 93°

ARNO Kofler

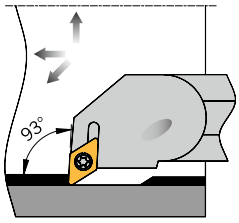

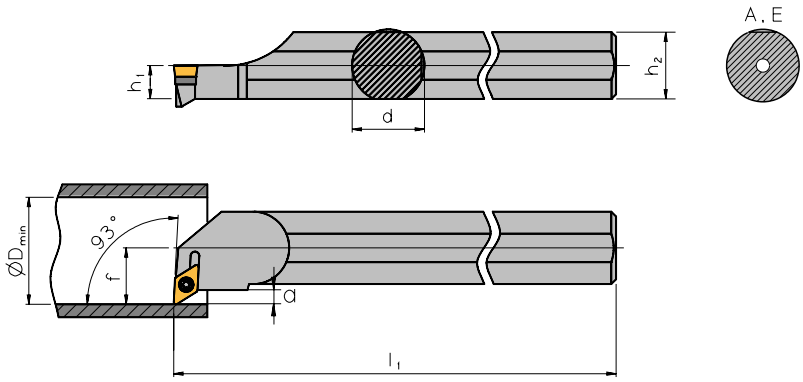

Right hand execution shown

2

Boring Bars - Steel Shank

Designation	d	h_1	h_2	l_1	f	a	D_{min}	PG	Indexable insert
S10K SDUC R/L 07	10	4,5	9	125	7	1,9	14,0	8	DC.. 0702..
S12Q SDUC R/L 07	12	5,5	11	180	9	2,9	17,0	8	DC.. 0702..
S16R SDUC R/L 07	16	7,5	15	200	11	2,9	21,0	8	DC.. 0702..
S20S SDUC R/L 07	20	9,0	18	250	13	2,9	25,0	8	DC.. 0702..
S20S SDUC R/L 11	20	9,0	18	250	13	2,9	25,0	8	DC.. 11T3..
S25T SDUC R/L 11	25	11,5	23	300	17	4,4	31,5	8	DC.. 11T3..
S32U SDUC R/L 11	32	15,0	30	350	22	5,9	40,0	8	DC.. 11T3..
S40V SDUC R/L 11	40	18,5	37	400	27	6,9	49,0	8	DC.. 11T3..

Boring Bars - Steel Shank with Coolant Through

Designation	d	h_1	h_2	l_1	f	a	D_{min}	PG	Indexable insert
A10H SDUC R/L 07	10	5,0	9,5	100	7	1,9	14,0	8	DC.. 0702..
A12K SDUC R/L 07	12	6,0	11,5	125	9	2,9	17,0	8	DC.. 0702..
A16M SDUC R/L 07	16	8,0	15,5	150	11	2,9	21,0	8	DC.. 0702..
A20Q SDUC R/L 07	20	10,0	19,0	180	13	2,9	25,0	8	DC.. 0702..
A20Q SDUC R/L 11	20	10,0	19,0	180	13	2,9	25,0	8	DC.. 11T3..
A25R SDUC R/L 11	25	12,5	24,0	200	17	4,4	31,5	8	DC.. 11T3..
A32S SDUC R/L 11	32	16,0	31,0	250	22	5,9	40,0	8	DC.. 11T3..
A40T SDUC R/L 11	40	20,0	38,5	300	27	6,9	49,0	8	DC.. 11T3..

Remark: A-execution with cylindrical part at the end of the shank

Boring Bars - Carbide Shank with Coolant Through

Designation	d	h_1	h_2	l_1	f	a	D_{min}	PG	Indexable insert
E10K SDUC R/L 07	10	5,0	9,5	125	7	1,9	14,0	30	DC.. 0702..
E12Q SDUC R/L 07	12	6,0	11,5	180	9	2,9	17,0	30	DC.. 0702..
E16R SDUC R/L 07	16	8,0	15,5	200	11	2,9	21,0	30	DC.. 0702..
E20S SDUC R/L 11	20	10,0	19,0	250	13	2,9	25,0	30	DC.. 11T3..
E25T SDUC R/L 11	25	12,5	24,0	300	17	4,4	31,5	30	DC.. 11T3..
E32U SDUC R/L 11	32	16,0	31,0	350	22	5,9	40,0	30	DC.. 11T3..

Spare Parts

For boring bar	Support pad	Bushing	Screw	Key	Spare part set ❹
.. 10-20.. SDUC R/L 07	–	–	SS 1751	KS 1751	S 1751
.. 20.. SDUC R/L 11	–	–	SS 1114	KS 1111	S 1114
.. 25-40.. SDUC R/L 11	US 2311	GBS 1111	SS 1111	KS 1115	S 2316

❹ Spare part set consists of: 3 screws + 1 key. Depending on type of toolholder also 1 support pad + 1 bushing

Dimensions in mm

SDXC R/L Approach angle 93°

ARNO Kofler

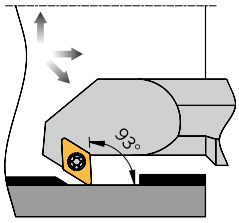

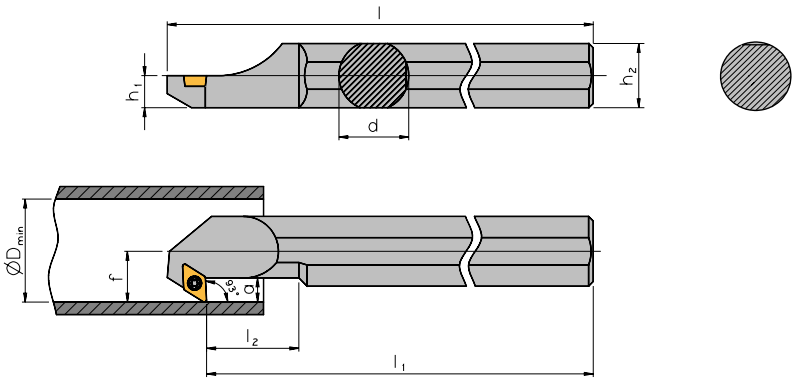

Right hand execution shown

Boring Bars - Steel Shank

Designation	d	h_1	h_2	l	l_1	l_2	f	a	D_{min}	PG	Indexable insert
S12Q SDXC R/L 07	12	5,5	11	191,4	180	24	9	4,5	17,0	8	**DC.. 0702..**
S16R SDXC R/L 07	16	7,5	15	211,4	200	32	11	4,5	21,0	8	**DC.. 0702..**
S20S SDXC R/L 11	20	9,0	18	267,6	250	40	13	10,8	25,0	8	**DC.. 11T3..**
S25T SDXC R/L 11	25	11,5	23	317,6	300	50	17	10,8	31,5	8	**DC.. 11T3..**

Spare Parts

For boring bar	Screw	Key	Spare part set ❹
.. 12-16.. SDXC R/L 07	SS 1751	KS 1751	S 1751
.. 20-25.. SDXC R/L 11	SS 2314	KS 1111	S 2314

❹ Spare part set consists of: 3 screws + 1 key

2

SSKC R/L Approach angle 75°

ARNO Kofler

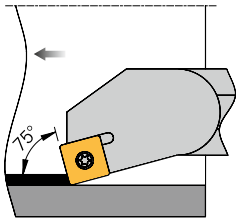

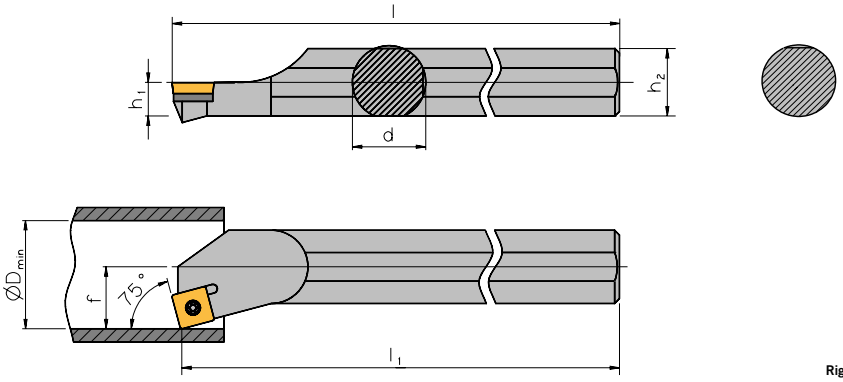

Right hand execution shown

2

Boring Bars - Steel Shank

Designation	d	h_1	h_2	l	l_1	f	D_{min}	PG	Indexable insert
S16R SSKC R/L 09	16	7,5	15	202,2	200	11	21,0	**8**	**SC.. 09T3..**
S20S SSKC R/L 09	20	9,0	18	252,2	250	13	25,0	**8**	**SC.. 09T3..**
S25T SSKC R/L 09	25	11,5	23	302,2	300	17	31,5	**8**	**SC.. 09T3..**
S32U SSKC R/L 12	32	15,0	30	353,1	350	22	40,0	**8**	**SC.. 1204..**
S40V SSKC R/L 12	40	18,5	37	403,1	400	27	49,0	**8**	**SC.. 1204..**

Spare Parts

For boring bar	Support pad	Bushing	Screw	Key	Spare part set ❹
.. 16-20.. SSKC R/L 09	–	–	SS 1114	KS 1111	S 1114
.. 25.. SSKC R/L 09	–	–	SS 1111	KS 1111	S 1111
.. 32-40.. SSKC R/L 12	US 4221	GBS 1221	SS 1221	KS 1115	S 4226

❹ Spare part set consists of: 3 screws + 1 key. Depending on type of toolholder also 1 support pad + 1 bushing

Dimensions in mm

SSSC R/L Approach angle 45°

ARNO Kofler

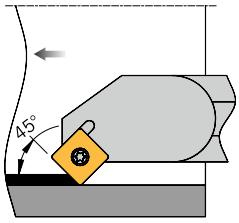

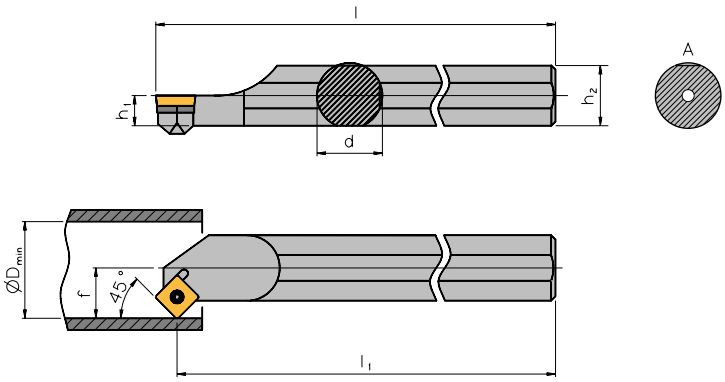

Right hand execution shown

Boring Bars - Steel Shank

Designation	d	h_1	h_2	l	l_1	f	D_{min}	PG	Indexable insert
S16R SSSC R/L 09	16	7,5	15	206,1	200	11	21,0	8	**SC.. 09T3..**
S20S SSSC R/L 09	20	9,0	18	256,1	250	13	25,0	8	**SC.. 09T3..**
S25T SSSC R/L 09	25	11,5	23	306,1	300	17	31,5	8	**SC.. 09T3..**
S32U SSSC R/L 12	32	15,0	30	358,3	350	22	40,0	8	**SC.. 1204..**
S40V SSSC R/L 12	40	18,5	37	408,3	400	27	49,0	8	**SC.. 1204..**

Boring Bars - Steel Shank with Coolant Through

Designation	d	h_1	h_2	l	l_1	f	D_{min}	PG	Indexable insert
A16M SSSC R/L 09	16	8,0	15,5	156,1	150	11	21,0	8	**SC.. 09T3..**
A20Q SSSC R/L 09	20	10,0	19,0	186,1	180	13	25,0	8	**SC.. 09T3..**
A25R SSSC R/L 09	25	12,5	24,0	206,1	200	17	31,5	8	**SC.. 09T3..**
A32S SSSC R/L 12	32	16,0	31,0	256,1	250	22	40,0	8	**SC.. 1204..**
A40T SSSC R/L 12	40	20,0	38,5	306,1	300	27	49,0	8	**SC.. 1204..**

Remark: A-execution with cylindrical part at the end of the shank

Spare Parts

For boring bar	Support pad	Bushing	Screw	Key	Spare part set ❹
.. 16-20.. SSSC R/L 09	–	–	SS 1114	KS 1111	S 1114
.. 25.. SSSC R/L 09	–	–	SS 1111	KS 1111	S 1111
.. 32-40.. SSSC R/L 12	US 4221	GBS 1221	SS 1221	KS 1115	S 4226

❹ Spare part set consists of: 3 screws + 1 key. Depending on type of toolholder also 1 support pad + 1 bushing

STFC R/L Approach angle 90°

ARNO Kofler

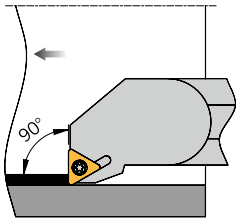

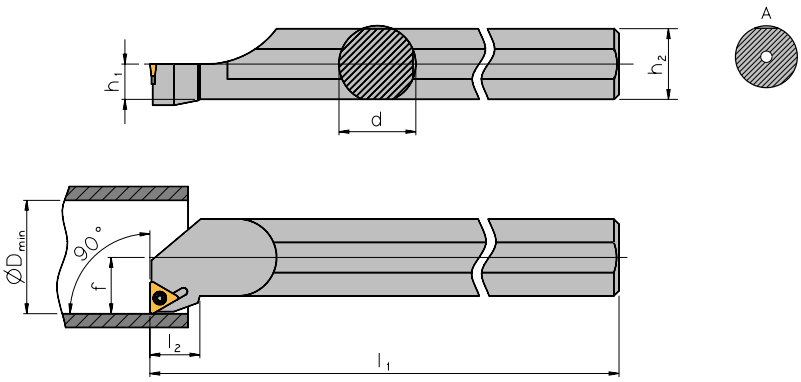

Right hand execution shown

2

Boring Bars - Steel Shank

Designation	d	h_1	h_2	l_1	l_2	f	D_{min}	PG	Indexable insert
S10K STFC R/L 09	10	4,5	9	125	12	7	14,0	8	**TC.. 0902..**
S12Q STFC R/L 11	12	5,5	11	180	13	9	17,0	8	**TC.. 1102..**
S16R STFC R/L 11	16	7,5	15	200	13	11	21,0	8	**TC.. 1102..**
S20S STFC R/L 11	20	9,0	18	250	13	13	25,0	8	**TC.. 1102..**
S25T STFC R/L 16	25	11,5	23	300	21	17	31,5	8	**TC.. 16T3..**
S32U STFC R/L 16	32	15,0	30	350	21	22	40,0	8	**TC.. 16T3..**
S40V STFC R/L 16	40	18,5	37	400	21	27	49,0	8	**TC.. 16T3..**

Boring Bars - Steel Shank with Coolant Through

Designation	d	h_1	h_2	l_1	l_2	f	D_{min}	PG	Indexable insert
A10H STFC R/L 09	10	5,0	9,5	100	12	7	14,0	8	**TC.. 0902..**
A12K STFC R/L 11	12	6,0	11,5	125	13	9	17,0	8	**TC.. 1102..**
A16M STFC R/L 11	16	8,0	15,5	150	13	11	21,0	8	**TC.. 1102..**
A20Q STFC R/L 11	20	10,0	19,0	180	13	13	25,0	8	**TC.. 1102..**
A25R STFC R/L 16	25	12,5	24,0	200	21	17	31,5	8	**TC.. 16T3..**
A32S STFC R/L 16	32	16,0	31,0	250	21	22	40,0	8	**TC.. 16T3..**
A40T STFC R/L 16	40	20,0	38,5	300	21	27	49,0	8	**TC.. 16T3..**

Remark: A-execution with cylindrical part at the end of the shank

Spare Parts

For boring bar	Support pad	Bushing	Screw	Key	Spare part set ❹
.. 10.. STFC R/L 09	–	–	SS 5151	KS 5151	S 5151
.. 12-20.. STFC R/L 11	–	–	SS 1751	KS 1751	S 1751
.. 25-40.. STFC R/L 16	US 5511	GBS 1111	SS 1111	KS 1115	S 5516

❹ Spare part set consists of: 3 screws + 1 key. Depending on type of toolholder also 1 support pad + 1 bushing

STFC R/L Approach angle 90°

ARNO Kofler

CNC Auto Lathes

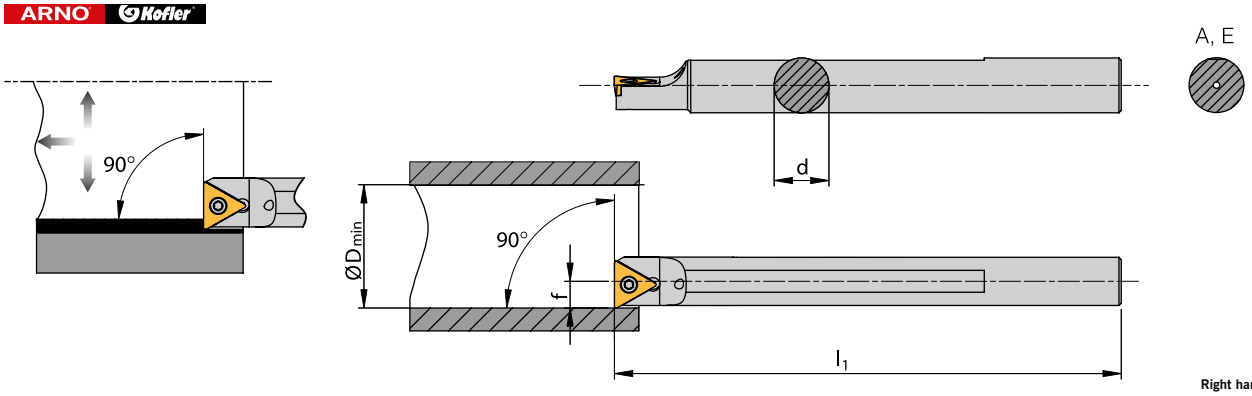

Right hand execution shown

2

Boring Bars - Steel Shank with Coolant Through

Designation	d	l_1	f	D_{min}	PG	Indexable insert
A08F STFC R/L 06-A	8	80	4,3	8,4	8	TC.. 06T1..
A10H STFC R/L 09-A	10	100	5,3	10,4	8	TC.. 0902..
A12K STFC R/L 11-A	12	125	6,3	12,5	8	TC.. 1102..
A16M STFC R/L 11-A	16	150	8,8	16,5	8	TC.. 1102..

Remark: A-execution with cylindrical part at the end of the shank

Boring Bars - Carbide Shank with Coolant Through

Designation	d	l_1	f	D_{min}	PG	Indexable insert
E08H STFC R/L 06-A	8	100	4,3	8,4	30	TC.. 06T1..
E10K STFC R/L 09-A	10	125	5,3	10,4	30	TC.. 0902..
E12Q STFC R/L 11-A	12	180	6,3	12,5	30	TC.. 1102..
E16R STFC R/L 11-A	16	200	8,8	16,5	30	TC.. 1102..

Spare Parts

For boring bar	Screw	Key	Spare part set ❹
.. 08.. STFC R/L 06-A	SS 5140	KS 1886	–
.. 10.. STFC R/L 09-A	SS 5151	KS 5151	S 5151
.. 12-16.. STFC R/L 11-A	SS 1751	KS 1751	S 1751

❹ Spare part set consists of: 3 screws + 1 key

STUC R/L Approach angle 93°

ARNO Kofler

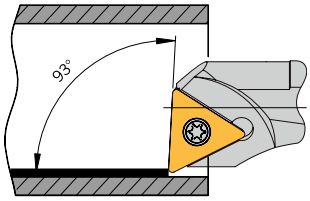

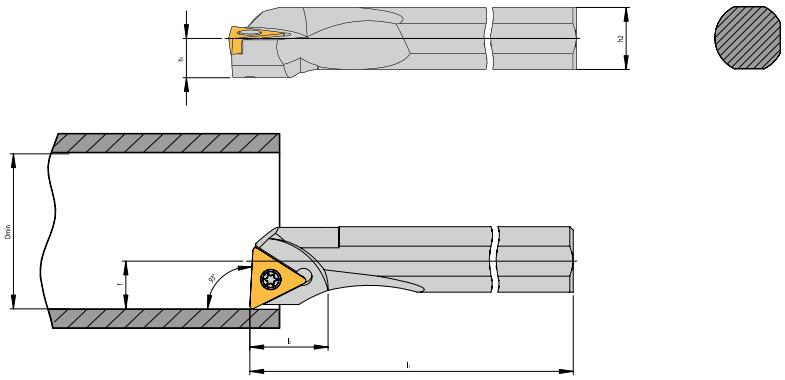

Right hand execution shown

2

Boring Bars - Steel Shank

Designation	d	h_1	h_2	l_1	l_2	f	D_{min}	PG	Indexable insert
S10K STUC R/L 09	10	4,5	9	125	11,3	6,9	12,5	8	TC.. 0902..
S12Q STUC R/L 11	12	5,5	11	180	13,9	8,9	16,0	8	TC.. 1102..
S16R STUC R/L 16	16	7,5	15	200	23,4	10,9	21,0	8	TC.. 16T3..
S20S STUC R/L 16	20	9,0	18	250	27,8	12,9	25,0	8	TC.. 16T3..
S25T STUC R/L 16	25	11,5	23	300	34,1	16,9	31,5	8	TC.. 16T3..
S32U STUC R/L 16	32	18,0	30	350	37,9	21,9	40,0	8	TC.. 16T3..

Boring Bars - Steel Shank with Coolant Through

Designation	d	h_1	h_2	l_1	l_2	f	D_{min}	PG	Indexable insert
A10H STUC R/L 09	10	4,5	9,0	100	11,3	6,9	12,5	8	TC.. 0902..
A12K STUC R/L 11	12	5,5	11,0	125	13,9	8,9	16,0	8	TC.. 1102..
A16M STUC R/L 16	16	7,5	15,0	150	23,4	10,9	21,0	8	TC.. 16T3..
A20Q STUC R/L 16	20	9,0	18,0	180	27,8	12,9	25,0	8	TC.. 16T3..
A25R STUC R/L 16	25	11,5	23,0	200	34,1	16,9	31,5	8	TC.. 16T3..
A32S STUC R/L 16	32	18,0	30,0	250	37,9	21,9	40,0	8	TC.. 16T3..

Spare Parts

For boring bar	Support pad	Bushing	Screw	Key	Spare part set ❹
A08F STUC R 06	–	–	SS 5140	KS 1886	–
S10K STUC R/L 09	–	–	SS 5151	KS 5151	S 5151
S12Q STUC R/L 11	–	–	SS 1751	KS 1751	S 1751
S16R STUC R/L 16	–	–	SS 1114	KS 1111	S 1114
S20S STUC R/L 16	–	–	SS 1111	KS 1111	S 1111
S25T STUC R/L 16	–	–	SS 1111	KS 1111	S 1111
S32U STUC R/L 16	US 5511	GBS 1111	SS 1111	KS 1115	S 5516

❹ Spare part set consists of: 3 screws + 1 key. Depending on type of toolholder also 1 support pad + 1 bushing

SVLC R/L Approach angle 95°

ARNO Kofler

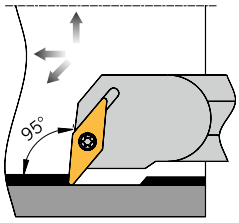

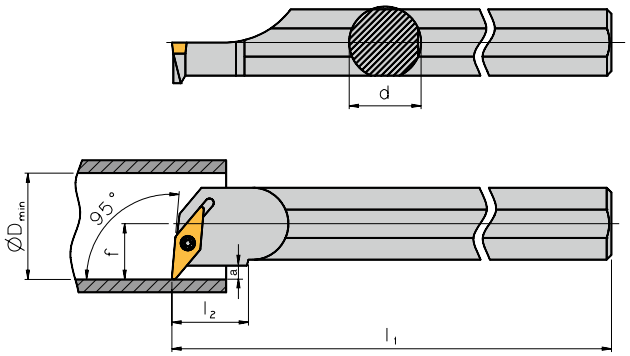

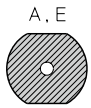

Right hand execution shown

Boring Bars - Steel Shank

Designation	d	a	l_1	l_2	f	D_{min}	PG	Indexable insert
S10H SVLC R/L 07	10	5	100	22	7	12,5	8	VC.. 0702..
S12K SVLC R/L 07	12	6	125	28	9	15,5	8	VC.. 0702..
S16M SVLC R/L 07	16	5	150	36	11	19,5	8	VC.. 0702..

Boring Bars - Steel Shank with Coolant Through

Designation	d	a	l_1	l_2	f	D_{min}	PG	Indexable insert
A10H SVLC R/L 07	10	5	100	22	7	12,5	8	VC.. 0702..
A12K SVLC R/L 07	12	6	125	28	9	15,5	8	VC.. 0702..
A16M SVLC R/L 07	16	5	150	36	11	19,5	8	VC.. 0702..

Boring Bars - Carbide Shank with Coolant Through

Designation	d	a	l_1	l_2	f	D_{min}	PG	Indexable insert
E10H SVLC R/L 07	10	5	100	32	7	12,5	30	VC.. 0702..
E12K SVLC R/L 07	12	6	125	40	9	15,5	30	VC.. 0702..
E16M SVLC R/L 07	16	5	150	55	11	19,5	30	VC.. 0702..

Spare Parts

For boring bar	Screw	Key
.. SVLC R/L 07	SS 5140	KS 1886

SVOC R/L Approach angle 95°

ARNO Kofler

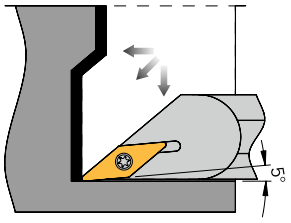

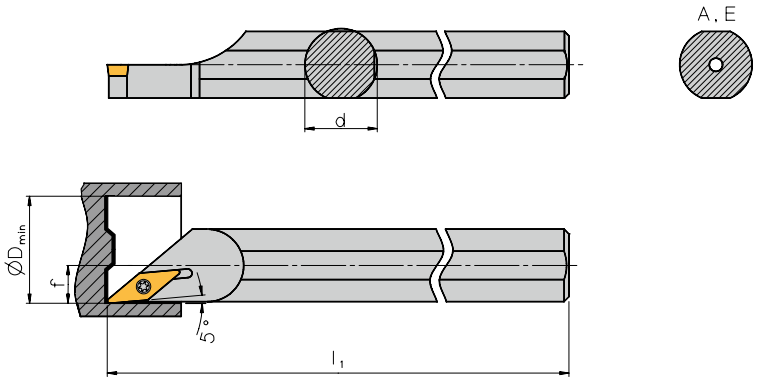

Right hand execution shown

2

Boring Bars - Steel Shank with Coolant Through

Designation	d	l_1	f	D_{min}	PG	Indexable insert
A10H SVOC R/L 07	10	100	5,5	13	8	**VC.. 0702..**
A12K SVOC R/L 07	12	125	6,5	13	8	**VC.. 0702..**
A16M SVOC R/L 11	16	150	8,5	17	8	**VC.. 1103..**
A20Q SVOC R/L 11	20	180	10,5	22	8	**VC.. 1103..**
A25R SVOC R/L 11	25	200	13,0	26	8	**VC.. 1103..**
A32S SVOC R/L 16	32	250	16,5	38	8	**VC.. 1604..**
A40T SVOC R/L 16	40	300	21,0	42	8	**VC.. 1604..**

Spare Parts

For boring bar	Screw	Key	Spare part set ❹
.. SVOC R/L 07	SS 5140	KS 1886	–
.. SVOC R/L 11	SS 1751	KS 1751	S 1751
.. SVOC R/L 16	SS 1111	KS 1115	S 6527

❹ Spare part set consists of: 3 screws + 1 key

SVQC R/L Approach angle 107,5°

ARNO Kofler

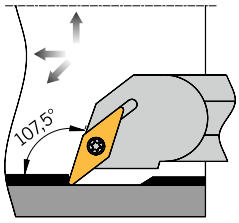

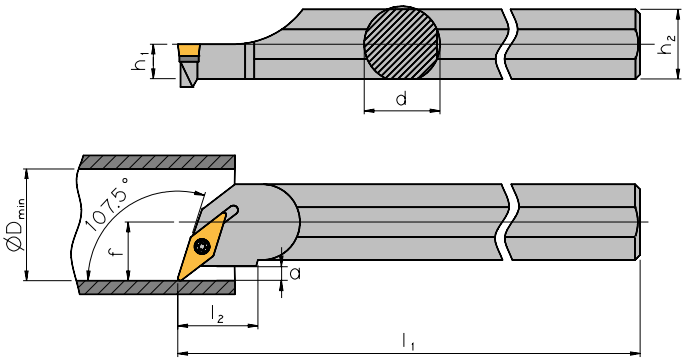

Right hand execution shown

Boring Bars - Steel Shank

Designation	d	h_1	h_2	l_1	l_2	f	a	D_{min}	PG	Indexable insert
S16R SVQC R/L 11	16	7,5	15	200	16,5	11	2,9	21,0	8	VC.. 1103..
S20S SVQC R/L 11	20	9,0	18	250	20,5	13	2,9	25,0	8	VC.. 1103..
S25T SVQC R/L 11	25	11,5	23	300	25,5	17	4,4	31,5	8	VC.. 1103..
S32U SVQC R/L 16	32	15,0	30	350	33,5	22	5,9	40,0	8	VC.. 1604..
S40V SVQC R/L 16	40	18,5	37	400	40,0	27	6,9	49,0	8	VC.. 1604..

Boring Bars - Steel Shank with Coolant Through

Designation	d	h_1	h_2	l_1	l_2	f	a	D_{min}	PG	Indexable insert
A16M SVQC R/L 11	16	8,0	15,5	150	16,5	11	2,9	21,0	8	VC.. 1103..
A20Q SVQC R/L 11	20	10,0	19,0	180	20,5	13	2,9	25,0	8	VC.. 1103..
A25R SVQC R/L 11	25	12,5	24,0	200	25,5	17	4,3	31,5	8	VC.. 1103..
A32S SVQC R/L 16	32	16,0	31,0	250	33,5	22	5,9	40,0	8	VC.. 1604..
A40T SVQC R/L 16	40	20,0	38,5	300	40,0	27	6,9	49,0	8	VC.. 1604..

Remark: A-execution with cylindrical part at the end of the shank

Spare Parts

For boring bar	Support pad	Bushing	Screw	Key	Spare part set ❹
.. SVQC R/L 11	–	–	SS 1751	KS 1751	S 1751
.. SVQC R/L 16	US 6522 ❶ / US 6523 ❷	GBS 1111	SS 1111	KS 1115	S 6527 ❶ / S 6528 ❷

❶ For indexable inserts with 0,8mm radius

❷ For indexable inserts with 1,2mm radius

❹ Spare part set consists of: 3 screws + 1 key. Depending on type of toolholder also 1 support pad + 1 bushing

SV95C R/L Approach angle 95°

ARNO Kofler

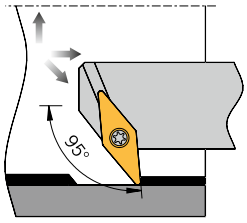

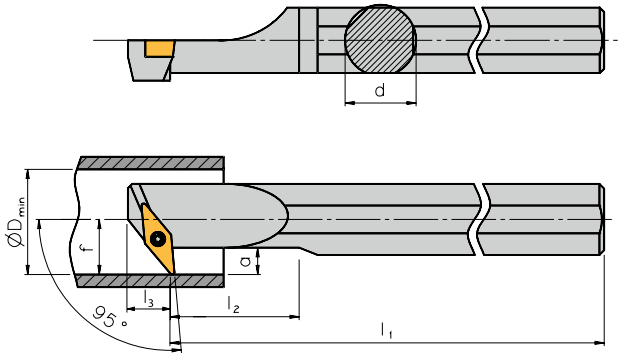

Right hand execution shown

2

Boring Bars - Steel Shank

Designation	d	a	l_1	l_2	l_3	f	D_{min}	PG	Indexable insert
S10H SV95C R/L 07	10	5	100	22	7,3	7	12,5	8	VC.. 0702..
S12K SV95C R/L 07	12	6	125	28	6,5	9	15,5	8	VC.. 0702..
S16M SV95C R/L 07	16	5	150	36	7,0	11	17,5	8	VC.. 0702..

Boring Bars - Steel Shank with Coolant Through

Designation	d	a	l_1	l_2	l_3	f	D_{min}	PG	Indexable insert
A10H SV95C R/L 07	10	5	100	22	7,3	7	12,5	8	VC.. 0702..
A12K SV95C R/L 07	12	6	125	28	6,5	9	15,5	8	VC.. 0702..
A16M SV95C R/L 07	16	5	150	36	7,0	11	17,5	8	VC.. 0702..

Boring Bars - Carbide Shank with Coolant Through

Designation	d	a	l_1	l_2	l_3	f	D_{min}	PG	Indexable insert
E10H SV95C R/L 07	10	5	100	32	7,3	7	12,5	30	VC.. 0702..
E12K SV95C R/L 07	12	6	125	40	6,5	9	15,5	30	VC.. 0702..
E16M SV95C R/L 07	16	5	150	55	7,0	11	17,5	30	VC.. 0702..

Spare Parts

For boring bar	Screw	Key
.. SV95C R/L 07	SS 5140	KS 1886

SVUC R/L Approach angle 93°

ARNO Kofler

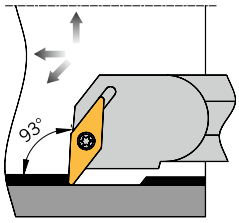

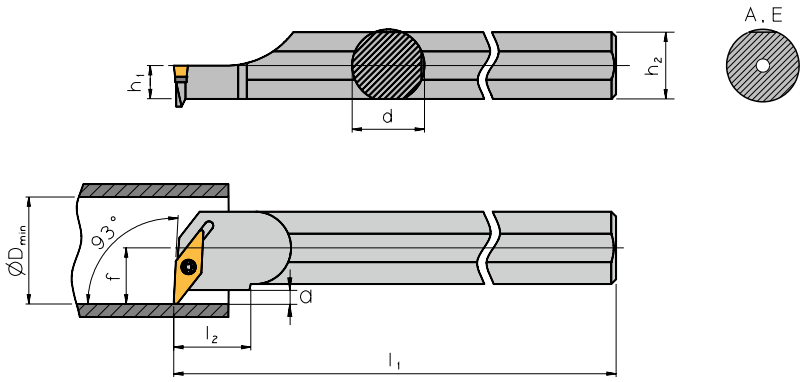

Right hand execution shown

Boring Bars - Steel Shank

Designation	d	h_1	h_2	l_1	l_2	f	a	D_{min}	PG	Indexable insert
S16R SVUC R/L 11	16	7,5	15	200	16,5	11	3,1	21,0	8	VC.. 1103..
S20S SVUC R/L 11	20	9,0	18	250	20,5	13	3,1	25,0	8	VC.. 1103..
S25T SVUC R/L 11	25	11,5	23	300	25,5	17	4,4	31,5	8	VC.. 1103..
S32U SVUC R/L 16	32	15,0	30	350	33,5	22	5,9	40,0	8	VC.. 1604..
S40V SVUC R/L 16	40	18,5	37	400	40,0	27	7,1	49,0	8	VC.. 1604..

Boring Bars - Steel Shank with Coolant Through

Designation	d	h_1	h_2	l_1	l_2	f	a	D_{min}	PG	Indexable insert
A16M SVUC R/L 11	16	8,0	15,5	150	16,5	11	3,1	21,0	8	VC.. 1103..
A20Q SVUC R/L 11	20	10,0	19,0	180	20,5	13	3,1	25,0	8	VC.. 1103..
A25R SVUC R/L 11	25	12,5	24,0	200	25,5	17	4,3	31,5	8	VC.. 1103..
A32S SVUC R/L 16	32	16,0	31,0	250	33,5	22	5,9	40,0	8	VC.. 1604..
A40T SVUC R/L 16	40	20,0	38,5	300	40,0	27	7,1	49,0	8	VC.. 1604..

Remark: A-execution with cylindrical part at the end of the shank

Boring Bars - Carbide Shank with Coolant Through

Designation	d	h_1	h_2	l_1	l_2	f	a	D_{min}	PG	Indexable insert
E16R SVUC R/L 11	16	8,0	15,5	200	16,5	11	2,9	21,0	30	VC.. 1103..
E20S SVUC R/L 11	20	10,0	19,0	250	20,5	13	2,9	25,0	30	VC.. 1103..
E25T SVUC R/L 11	25	12,5	24,0	300	25,5	17	4,3	31,5	30	VC.. 1103..

Spare Parts

For boring bar	Support pad	Bushing	Screw	Key	Spare part set ❹
.. 16-25.. SVUC R/L 11	–	–	SS 1751	KS 1751	S 1751
.. 32-40.. SVUC R/L 16	US 6522 ❶ / US 6523 ❷	GBS 1111	SS 1111	KS 1115	S 6527 ❶ / S 6528 ❷

❶ For indexable inserts with 0,8mm radius

❷ For indexable inserts with 1,2mm radius

❹ Spare part set consists of: 3 screws + 1 key. Depending on type of toolholder also 1 support pad + 1 bushing

SVVC R/L Approach angle 72,5°

ARNO Kofler

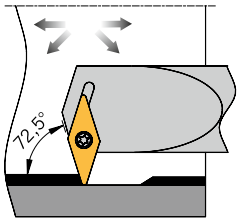

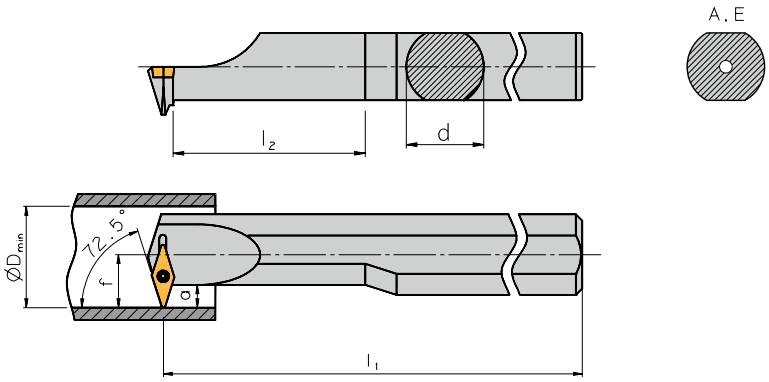

Right hand execution shown

2

Boring Bars - Steel Shank

Designation	d	a	l_1	l_2	f	D_{min}	PG	Indexable insert
S10H SVVC R/L 07	10	6	100	22	8	13,5	8	VC.. 0702..
S12K SVVC R/L 07	12	6	125	28	9	15,5	8	VC.. 0702..
S16M SVVC R/L 07	16	5	150	36	11	17,5	8	VC.. 0702..

Boring Bars - Steel Shank with Coolant Through

Designation	d	a	l_1	l_2	f	D_{min}	PG	Indexable insert
A10H SVVC R/L 07	10	6	100	22	8	13,5	8	VC.. 0702..
A12K SVVC R/L 07	12	6	125	28	9	15,5	8	VC.. 0702..
A16M SVVC R/L 07	16	5	150	36	11	17,5	8	VC.. 0702..

Boring Bars - Carbide Shank with Coolant Through

Designation	d	a	l_1	l_2	f	D_{min}	PG	Indexable insert
E10H SVVC R/L 07	10	6	100	32	8	13,5	30	VC.. 0702..
E12K SVVC R/L 07	12	6	125	40	9	15,5	30	VC.. 0702..
E16M SVVC R/L 07	16	5	150	55	11	17,5	30	VC.. 0702..

Spare Parts

For boring bar	Screw	Key
.. SVVC R/L 07	SS 5140	KS 1886

SVXC R/L Approach angle 113°

ARNO Kofler

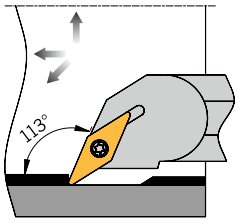

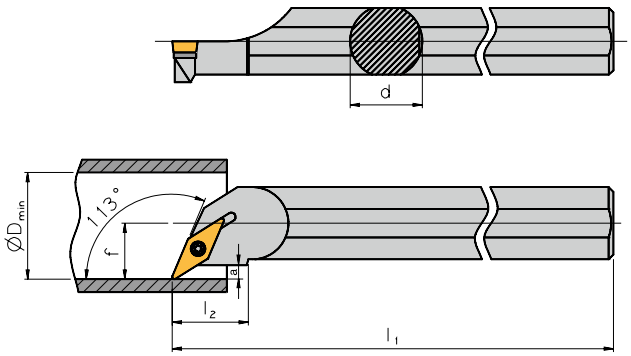

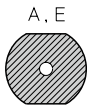

Right hand execution shown

Boring Bars - Steel Shank

Designation	d	a	l_1	l_2	f	D_{min}	PG	Indexable insert
S10H SVXC R/L 07	10	3	100	22	7	12,5	8	VC.. 0702..
S12K SVXC R/L 07	12	3	125	28	9	15,5	8	VC.. 0702..
S16M SVXC R/L 07	16	3	150	36	11	19,5	8	VC.. 0702..

Boring Bars - Steel Shank with Coolant Through

Designation	d	a	l_1	l_2	f	D_{min}	PG	Indexable insert
A10H SVXC R/L 07	10	3	100	22	7	12,5	8	VC.. 0702..
A12K SVXC R/L 07	12	3	125	28	9	15,5	8	VC.. 0702..
A16M SVXC R/L 07	16	3	150	36	11	19,5	8	VC.. 0702..

Boring Bars - Carbide Shank with Coolant Through

Designation	d	a	l_1	l_2	f	D_{min}	PG	Indexable insert
E10H SVXC R/L 07	10	3	100	32	7	12,5	30	VC.. 0702..
E12K SVXC R/L 07	12	3	125	40	9	15,5	30	VC.. 0702..
E16M SVXC R/L 07	16	3	150	55	11	19,5	30	VC.. 0702..

Spare Parts

For boring bar	Screw	Key
.. SVXC R/L 07	SS 5140	KS 1886

SWFC R/L Approach angle 90°

ARNO Kofler

CNC Auto Lathes

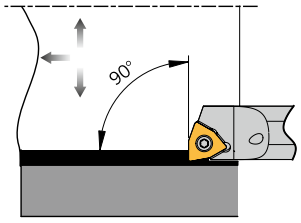

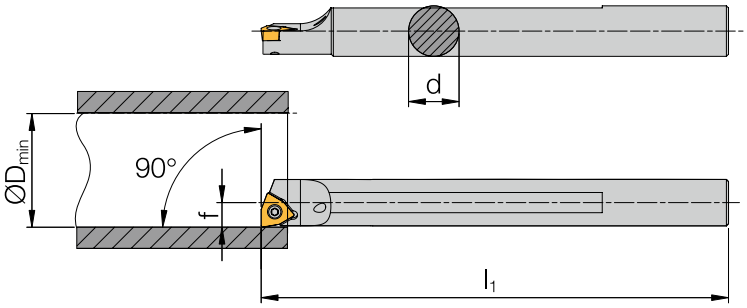

A, E

Right hand execution shown

2

Boring Bars - Steel Shank with Coolant Through

Designation	d	l_1	f	D_{min}	PG	Indexable insert
A08F SWFC R/L 04-A	8	80	4,3	8,5	8	WC.. 0402..
A10H SWFC R/L 04-A	10	100	5,3	10,4	8	WC.. 0402..
A12K SWFC R/L 04-A	12	125	6,3	12,5	8	WC.. 0402..
A16M SWFC R/L 06-A	16	150	8,8	16,5	8	WC.. 06T3..

Remark: A-execution with cylindrical part at the end of the shank

Boring Bars - Carbide Shank with Coolant Through

Designation	d	l_1	f	D_{min}	PG	Indexable insert
E08H SWFC R/L 04-A	8	100	4,3	8,5	30	WC.. 0402..
E10K SWFC R/L 04-A	10	125	5,3	10,4	30	WC.. 0402..
E12Q SWFC R/L 04-A	12	180	6,3	12,5	30	WC.. 0402..
E16R SWFC R/L 06-A	16	200	8,8	16,5	30	WC.. 06T3..

Spare Parts

For boring bar	Screw	Key	Spare part set ❹
.. 08-12.. SWFC R/L 04-A	SS 1751	KS 1751	S 1751
.. 16.. SWFC R/L 06-A	SS 1111	KS 1111	S 1111

❹ Spare part set consists of: 3 screws + 1 key

SWLC R/L Approach angle 95°

ARNO Kofler

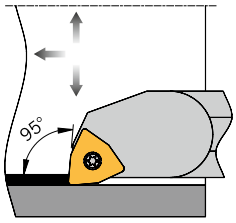

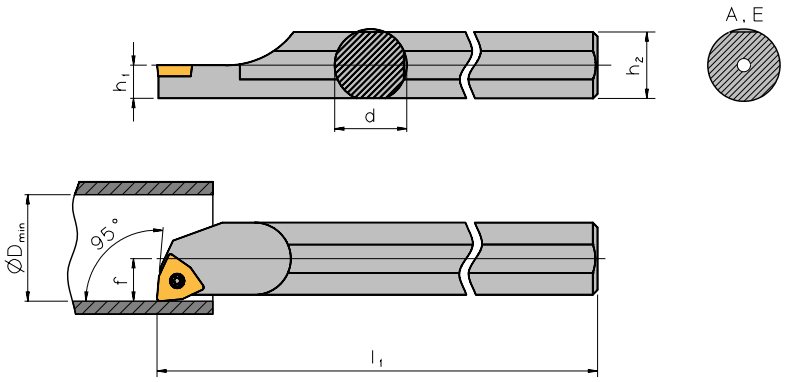

Right hand execution shown

Boring Bars - Steel Shank

Designation	d	h_1	h_2	l_1	f	D_{min}	PG	Indexable insert
S08H SWLC R/L 04	8	3,5	7	100	5	11,0	8	WC.. 0402..
S10K SWLC R/L 04	10	4,5	9	125	7	14,0	8	WC.. 0402..
S12Q SWLC R/L 04	12	5,5	11	180	9	17,0	8	WC.. 0402..
S16R SWLC R/L 06	16	7,5	15	200	11	21,0	8	WC.. 06T3..
S20S SWLC R/L 06	20	9,0	18	250	13	25,0	8	WC.. 06T3..
S25T SWLC R/L 06	25	11,5	23	300	17	31,5	8	WC.. 06T3..
S32U SWLC R/L 08	32	15,0	30	350	22	40,0	8	WC.. 0804..
S40V SWLC R/L 08	40	18,5	37	400	27	49,0	8	WC.. 0804..

Boring Bars - Steel Shank with Coolant Through

Designation	d	h_1	h_2	l_1	f	D_{min}	PG	Indexable insert
A08F SWLC R/L 04	8	4,0	7,5	80	5	11,0	8	WC.. 0402..
A10H SWLC R/L 04	10	5,0	9,5	100	7	14,0	8	WC.. 0402..
A12K SWLC R/L 04	12	6,0	11,5	125	9	17,0	8	WC.. 0402..
A16M SWLC R/L 06	16	8,0	15,5	150	11	21,0	8	WC.. 06T3..
A20Q SWLC R/L 06	20	10,0	19,0	180	13	25,0	8	WC.. 06T3..
A25R SWLC R/L 06	25	12,5	24,0	200	17	31,5	8	WC.. 06T3..
A32S SWLC R/L 08	32	16,0	31,0	250	22	40,0	8	WC.. 0804..
A40T SWLC R/L 08	40	20,0	38,5	300	27	49,0	8	WC.. 0804..

Remark: A-execution with cylindrical part at the end of the shank

Boring Bars - Carbide Shank with Coolant Through

Designation	d	h_1	h_2	l_1	f	D_{min}	PG	Indexable insert
E08H SWLC R/L 04	8	4,0	7,5	100	5	11,0	30	WC.. 0402..
E10K SWLC R/L 04	10	5,0	9,5	125	7	14,0	30	WC.. 0402..
E12Q SWLC R/L 04	12	6,0	11,5	180	9	17,0	30	WC.. 0402..
E16R SWLC R/L 06	16	8,0	15,5	200	11	21,0	30	WC.. 06T3..
E20S SWLC R/L 06	20	10,0	19,0	250	13	25,0	30	WC.. 06T3..
E25T SWLC R/L 06	25	12,5	24,0	300	17	31,5	30	WC.. 06T3..

Spare Parts

For boring bar	Support pad	Bushing	Screw	Key	Spare part set ❹
.. 08-12.. SWLC R/L 04	–	–	SS 1751	KS 1751	S 1751
.. 16-25.. SWLC R/L 06	–	–	SS 1111	KS 1111	S 1111
.. 32-40.. SWLC R/L 08	US 8821	GBS 1221	SS 1221	KS 1115	S 8821

❹ Spare part set consists of: 3 screws + 1 key. Depending on type of toolholder also 1 support pad + 1 bushing

SWUC R/L Approach angle 93°

ARNO Kofler

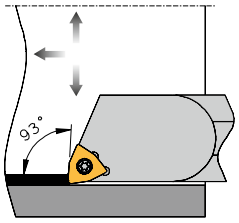

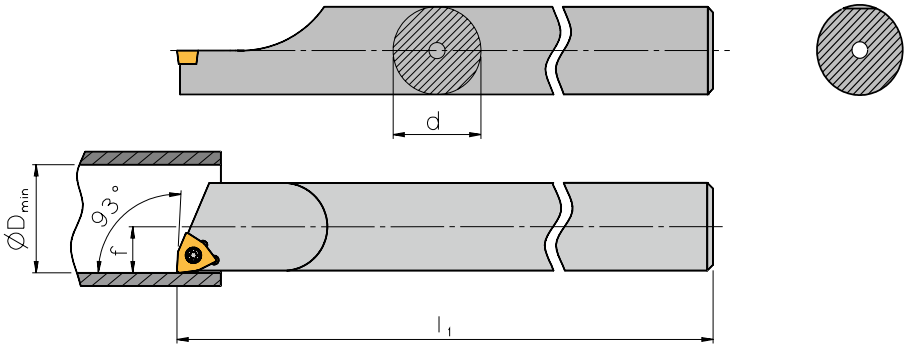

Right hand execution shown

2

Boring Bars - Carbide Shank with Coolant Through

Designation	d	l_1	f	D_{min}	PG	Indexable insert
E05F SWUC R/L 02	5	85	2,9	5,8	30	WC.. 0201..
E06G SWUC R/L 02	6	95	3,9	7,8	30	WC.. 0201..

Spare Parts

For boring bar	Screw	Key
.. SWUC R/L 02	T 2.03	KS 1886

SWUC R/L Approach angle 93°

ARNO Kofler

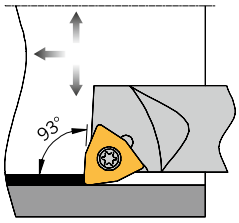

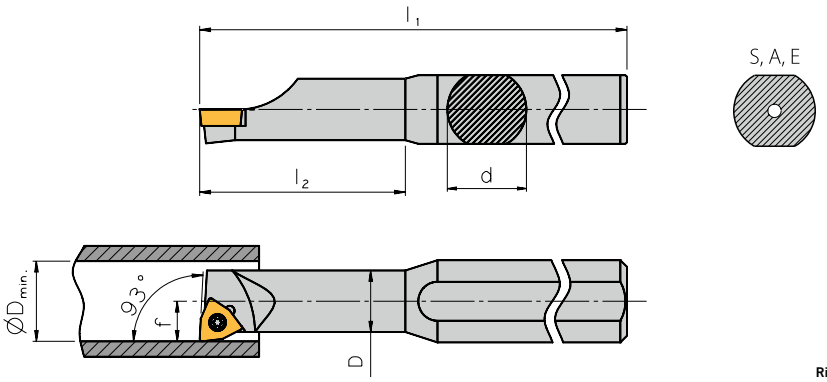

Right hand execution shown

Boring Bars - Recessed Steel Shank

Designation	d	D	l_1	l_2	f	D_{min}	PG	Indexable insert
S0508H SWUC R/L 02	8	5	100	18	2,9	5,8	8	WC.. 0201..
S0608H SWUC R/L 02	8	6	100	24	3,9	7,8	8	WC.. 0201..

Boring Bars - Recessed Steel Shank with Coolant Through

Designation	d	D	l_1	l_2	f	D_{min}	PG	Indexable insert
A0508H SWUC R/L 02	8	5	100	18	2,9	5,8	8	WC.. 0201..
A0608H SWUC R/L 02	8	6	100	24	3,9	7,8	8	WC.. 0201..

Boring Bars - Recessed Carbide Shank with Coolant Through

Designation	d	D	l_1	l_2	f	D_{min}	PG	Indexable insert
E0508H SWUC R/L 02	8	5	100	24	2,9	5,8	30	WC.. 0201..
E0608H SWUC R/L 02	8	6	100	32	3,9	7,8	30	WC.. 0201..

Spare Parts

For boring bar	Screw	Key
.. SWUC R/L 02	T 2.03	KS 1886

Set 1

Adjustable from 0,6 Nm – 1,5 Nm

1 Torque screwdriver
1/ea Bit Torx T6, Torx T7, Torx T8 and Torx T9
1 Adjustment key

(Order as: SET-TORQUE 1)

Set 2

Adjustable from 1,5 Nm – 3,0 Nm

1 Torque screwdriver
1/ea Bit Torx T9, Torx T10 and Torx T15
1 Adjustment key

(Order as: SET-TORQUE 2)

Set 3

Adjustable from 3,0 Nm – 5,4 Nm

1 Torque screwdriver
1/ea Bit Torx T10, Torx T15 and Torx T20
1 Adjustment key

(Order as: SET-TORQUE 3)

Recommended torque settings for indexable inserts

Thread	Torx size	max. torque
M1,8	T6	0,6 Nm
M2	T6	0,6 Nm
M2	T7	0,6 Nm
M2,2	T6	1,0 Nm
M2,2	T7	1,0 Nm
M2,2	T8	1,3 Nm
M3	T8	2,2 Nm
M3	T9	2,2 Nm
M3,5	T15	3,4 Nm
M4	T15	5,1 Nm
M4,5	T20	6,2 Nm
M5	T20	6,2 Nm
M6	T25	8,1 Nm

ARNO® Mini-System
for Grooving, Turning and Chamfering

AMS – ARNO® MINI-SYSTEM

AMS – is a modular boring system starting at 2.5mm diameter with a maximum depth of 30mm

- Boring from Ø 2,5mm
- Grooving from 0,8mm width
- Full-radius grooving from R 0,5mm
- Back turning and chamfering
- Pre-grooving and chamfering
- Copy turning
- Thread turning starting at M4
- Face grooving from Ø 5mm

ARNO®
WERKZEUGE

Order Hotline: 800-943-4426

Monday - Friday: 8AM to 5PM Central Time

INDEXABLE INSERTS

Indexable Inserts

- ISO-Designation System 124 – 125
- Overview / Preselection 126
- Chip Breakers 127 – 141
- Indexable Inserts
  - Carbide 142 – 185
  - High Positive 186 – 211
  - Cermet 212 – 225
  - CBN / PCD 226 – 240

3

3

3

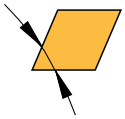

80°	C
55°	D
75°	E
86°	M
35°	V

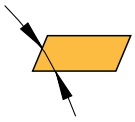

85°	A
82°	B
55°	K

	H
	L
	O
	P
	R
	S
	T
	W

C

Insert shape

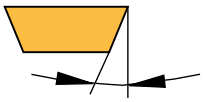

3°	A
5°	B
7°	C
15°	D
20°	E
25°	F
30°	G
0°	N
11°	P
Others	O

N

Clearance angle

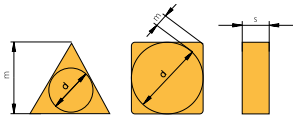

Range of tolerance [mm]			Tolerance
d ±	m ±	s ±	
0,025	0,005	0,025	A
0,025	0,013	0,025	C
0,025	0,025	0,025	E
0,013	0,005	0,025	F
0,025	0,025	0,05-0,13	G
0,013	0,013	0,025	H
0,05-0,15	0,005	0,025	J
0,05-0,15	0,013	0,025	K
0,05-0,15	0,025	0,025	L
0,05-0,15	0,08-0,2	0,05-0,13	M
0,05-0,15	0,08-0,2	0,025	N
0,08-0,25	0,13-0,38	0,13	U
Special shape			X

M

Tolerance

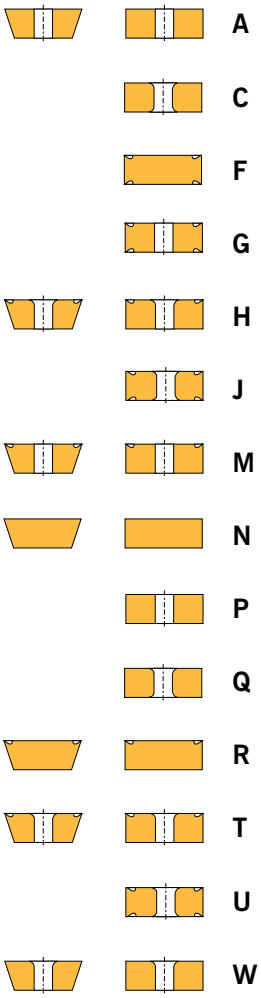

	A
	C
	F
	G
	H
	J
	M
	N
	P
	Q
	R
	T
	U
	W
Special shape	X

G

Type of insert

ISO-Designation System for Indexable Inserts

C

D

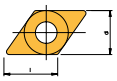

R

S

T

V

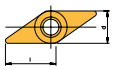

W

(Dimension l in brackets)

d (mm)	C	D	R	S	T	V	W
3,97					06 (6,35)	07 (6,921)	02 (2,70)
5,56	05 (5,6)				09 (9,6)		03 (3,8)
6,0			06				
6,35	06 (6,45)	07 (7,75)			11 (11,0)	11 (11,1)	04 (4,3)
7,94						13 (13,1)	
8,0			08				
9,525	09 (9,67)	11 (11,6)		09 (9,525)	16 (16,5)	16 (16,5)	06 (6,5)
10,0			10				
12,0			12				
12,70	12 (12,9)	15 (15,5)		12 (12,7)	22 (22,0)	22 (22,1)	08 (8,72)
15,875	16 (16,1)			15 (15,875)			
19,05	19 (19,3)			19 (19,05)			

16

Edge length

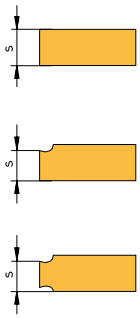

s [mm]	Kennzahl
1,59	**01**
1,98	**T1**
2,38	**02**
3,18	**03**
3,97	**T3**
4,76	**04**
5,56	**05**
6,35	**06**
7,94	**07**
9,52	**09**

06

Insert thickness

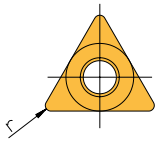

r [mm]	
0,2	**02**
0,4	**04**
0,8	**08**
1,2	**12**
1,6	**16**
2,4	**24**
0	**00**

OO: Round insert (inch)

MO: Round insert (metr.)

08

Corner radius

F

Sharp

E

Rounded

T

Chamfered

S

Chamfered and rounded

E

Edge condition

R

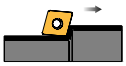

L

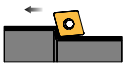

N

N

Cutting direction

Special chipbreaker shapes can be indicated by an internal company coding system at the 10th position.

e.g. - NM2

- AM

- ACB

NM2

Additional coding system

3

ISO	Material	Possible cutting materials	Recommended geometries					
			Finishing		Medium machining		Roughing	
			negative	positive	negative	positive	negative	positive
P	Unalloyed steel and cast steel	Carbide	-WSS		-NA	-AM	-NG	
				-PMS		-PMS		
				-PS1	-NMG	-WMS	-NMG	
				-WMS	-NMS			
					-VA			
					-WSS			
		Cermet	-AQ	-AQ	-NFC			
			NFC	-PMC	-NMC	-PMC	-NMC	
			NWC		-NWC			
	Low alloyed steel and cast steel	Carbide	-WSS		-NA			
				-PMS	-NMA			
				-PS1	-NMG			
				-WMS	-NMS			
					-VA			
					-WSS			
		Carbide - High positive geometry		-ACB				
				-ALU				
				-ASF				
				-AWI				
		Cermet	-AQ	-AQ	-NFC			
			-NWC	-PMC	-NMC		-PMC	
			-NFC		-NWC			
	High alloyed steel, high alloyed tool steel and cast steel	Carbide	-WSS		-NA	-AM	-NG	
				-PMS	-NMG	-PMS		
				-PS1		-WMS	-NMG	
				-WMS				
		Cermet	-AQ	-AQ	-NMC	-PMC		
			-NWC	-PMC	-NWC			
		HSS		❶		❶		
	Stainless steel and cast steel	Carbide	-NSV		-NA	-AM	-NG	
			-WSS	-PMS		-PMS		
				-PS1	-NMG	-WMS	-NMG	
				-WMS	-NMS			
					-VA			
					-WSS			
		Carbide - High positive geometry		-ACB				
				-ALU				
				-ASF				
		Cermet	-AQ	-AQ	-NMC	-PMC		
			-NFC	-PMC	-NWC			
		HSS		❶		❶		
M	Stainless steel and cast steel	Carbide	-EX		-NA	-AM		
			-NSR	-PS		-WMS	-NRR	
			-NSV	-PS1	-NMS			
				-WMS	-NRR			
					-VA			
		Carbide - High positive geometry		-ACB				
				-AEC				
				-ALU				
				-ASF				
				-AWI		-PMC		
		HSS		❶		❶		
K	Cast iron Cast iron with nodular graphite Malleable iron	Carbide	-EX	-PMS	-NA	-AM		
			-WSS	-PS		-PMS	-NMG	
					-NMG			
					-WSS			
		Carbide - High positive geometry		-ACB				
				-ALU				
				-ASF				
		CBN	❶	❶	❶	❶	❶	
N	Aluminum and aluminum alloys	Carbide - High positive geometry		-ACB		-ACB		-ACB
				-ALU		-ALU		-ALU
				-ASF		-AWI		-AWI
				-AWI				
				-PS				
		PCD	❶	❶				
	Copper and copper alloys (bronze/brass)	Carbide - High positive geometry		-ACB		-ACB		-ACB
				-ALU		-ALU		-ALU
				-ASF		-AWI		-AWI
				-AWI				
				-PS				
		PCD		❶		❶		
	Nonferrous materials Duroplastics, reinforced plastics, hard rubber	Carbide - High positive geometry		-ACB		-ACB		-ACB
				-ALU		-ALU		-ALU
				-AWI		-AWI		-AWI
				-PS				
S	High temperature resistant alloys	Carbide	-EX	-PS	-NRR	-WMS	-NRR	
			-NSR	-PS1	-VA			
		Carbide - High positive geometry		-ACB		-ACB		
				-ALU		-ALU		
				-ASF		-AWI		
				-AWI				
		HSS		❶		❶		-ACB
	Titanium alloys	Carbide	-EX	-PS	-NRR	-WMS	-NRR	
				-PS1	-VA			
		Carbide - High positive geometry		-ACB		-ACB		
				-ALU		-ALU		
				-ASF		-AWI		
				-AWI				
		PCD	❶	❶	❶	❶		
		HSS		❶		❶		
H	Hardened steel	CBN	❶	❶				

❶ Geometries are available for the corresponding machining procedures.
Remark: CBN grades should only be used for machining hard materials above 48HRC.

P Steel machining NEGATIVE

- K

Universal geometry for finishing and medium machining of steel, stainless steel and cast iron. Soft-cutting geometry. First choice for long and thin work pieces.

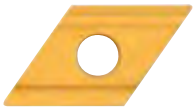

Medium machining
double sided

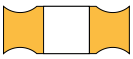

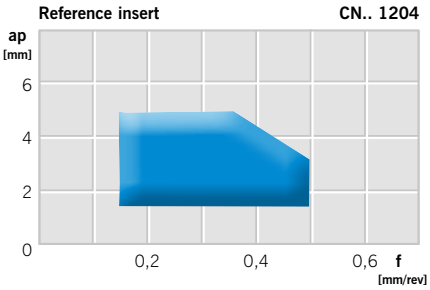

- NM2

Especially developed for medium machining of steel. The newly developed chip breaker guarantees optimum swarf formation. Excellent cutting edge stability and the reduced cutting temperature make this insert the first choice for performance machining.

Medium machining
double sided

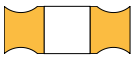

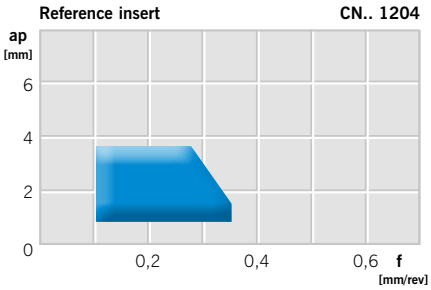

- NA

Universal geometry for machining steel at medium cutting depths and feed rates. Also suitable for stainless steel and cast materials. Wide chip breaking range for heavily varied cutting depths. Low cutting forces.

Medium machining
double sided

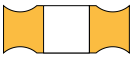

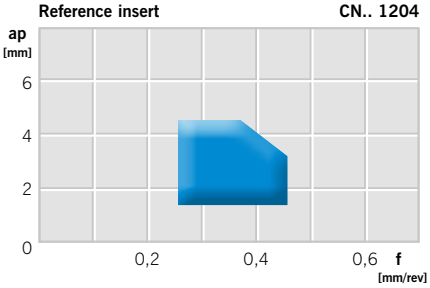

- NMG1

Universal geometry for roughing of steel, stainless steel and cast iron.

Roughing
double sided

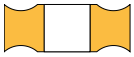

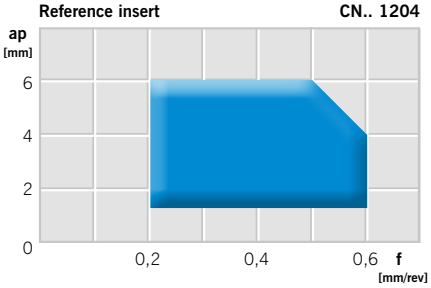

- NM1

Especially developed geometry for medium to rough machining of steel. Optimized chip breaker design for perfect chip breaking. Also suitable for stainless steel.

Medium to rough cutting
double sided

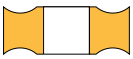

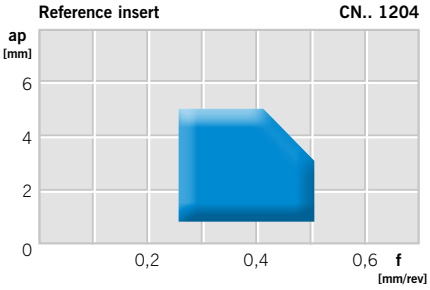

- NR1

Geometry for heavy roughing of steel and stainless steel. 0° rake angle and pimple chip breaker.

Heavy roughing
single sided

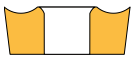

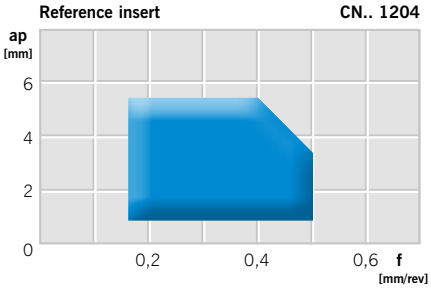

P Steel machining NEGATIVE

- NS1

Universal geometry for finishing steel and stainless steel.

Finishing
double sided

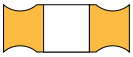

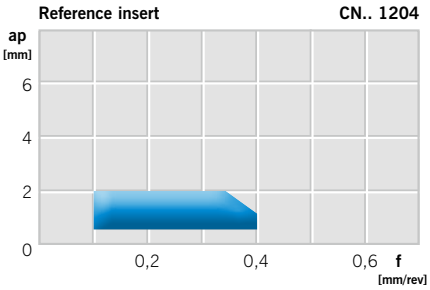

3

M Stainless steel machining NEGATIVE

- EX

Periphery ground geometry for machining exotic materials and stainless steel at light to medium machining (small to medium depth of cut and feed rates).

Finishing
double sided

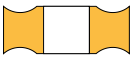

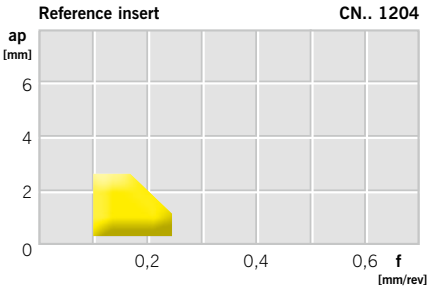

- NM2

Especially developed for medium machining of steel. The newly developed chip breaker guarantees optimum swarf formation. Excellent cutting edge stability and the reduced cutting temperature make this insert the first choice for performance machining.

Medium machining
double sided

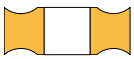

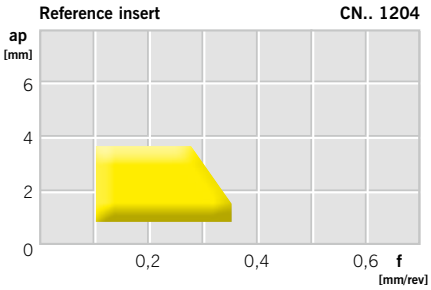

- K

Universal geometry for finishing and medium machining of steel, stainless steel and cast iron. Soft-cutting geometry. First choice for long and thin work pieces.

Medium machining
double sided

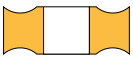

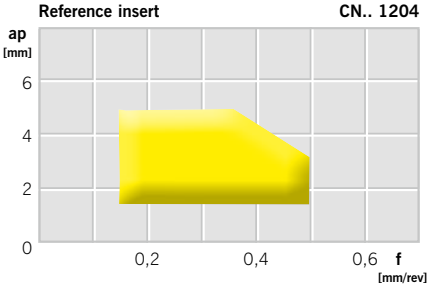

- NMG1

Universal geometry for roughing of steel, stainless steel and cast iron.

Roughing
double sided

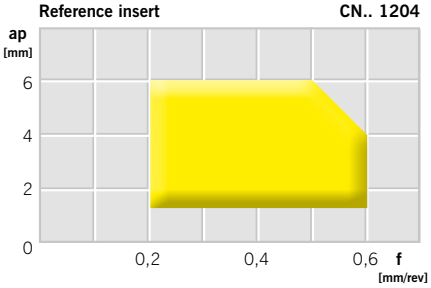

- NM1

Especially developed geometry for medium to rough machining of steel. Optimized chip breaker design for perfect chip breaking. Also suitable for stainless steel.

Medium to rough cutting
double sided

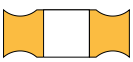

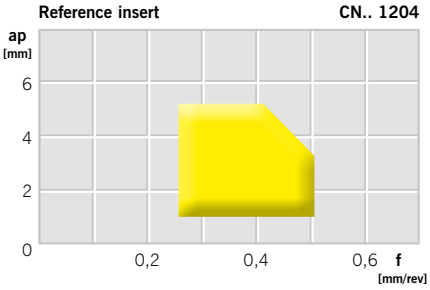

- NMR

Geometry especially for stainless steel and exotic materials. The extremely sharp cutting edge makes machining very difficult materials possible.

Medium machining
double sided

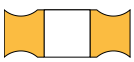

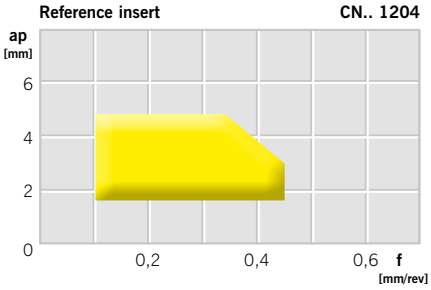

M Stainless steel machining NEGATIVE

- NR1

Geometry for heavy roughing of steel and stainless steel. 0° rake angle and pimple chip breaker.

Heavy roughing
single sided

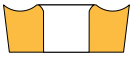

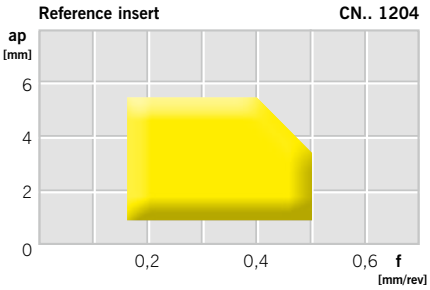

- NS1

Universal geometry for finishing of steel and stainless steel.

Finishing
double sided

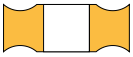

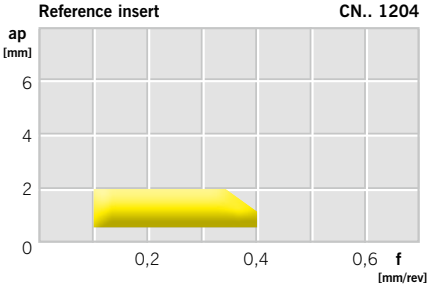

- VA

Special geometry for machining stainless steel and exotics from light to medium cutting (low to medium depth of cut and feed rates). Low cutting forces due to positive and extremely sharp cutting edge.

Medium machining
double sided

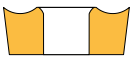

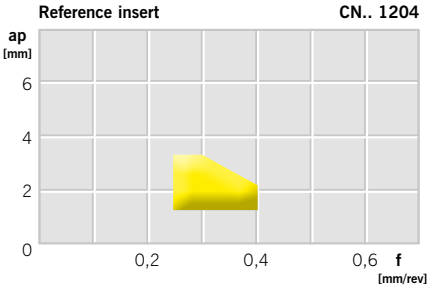

P Steel machining POSITIVE

- AB

Geometry for fine finishing and finishing of steel. Mini chip breaker for controlled chip breaking. Sharp cutting edge.

Finishing
single sided

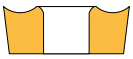

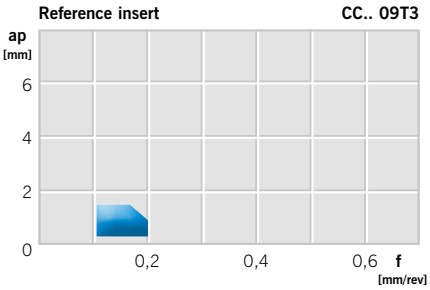

- AM

Chip breaker geometry for medium machining of steel, austenitic stainless steel and cast materials. Due to special chip pimples, very good chip control at low to medium depth of cut and feed rates. Smooth chip evacuation and low cutting forces.

Medium machining
single sided

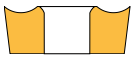

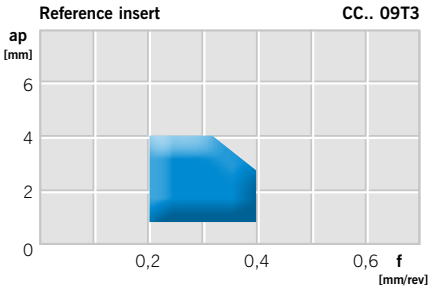

- WMS

Wiper geometry for machining steel. Extremely good surface finish due to wiper technology. Optimum chip breaking due to increased feed rates leading to reduced machine time and increased efficiency.

Finishing and
medium machining
single sided

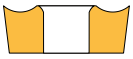

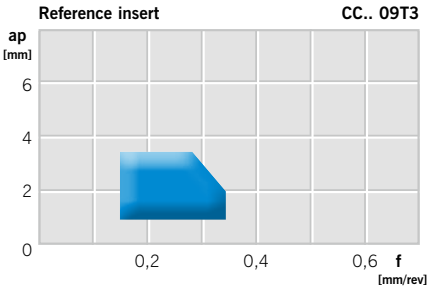

- PM1

Newly developed positive geometry for finishing and medium machining. This geometry is mostly suitable for steel and stainless steel. The double positive cutting edge ensures high reliability and excellent swarf evacuation. The wave shaped geometry offers excellent swarf control, even at high feed rates.

Finishing and
medium machining
single sided

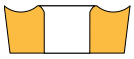

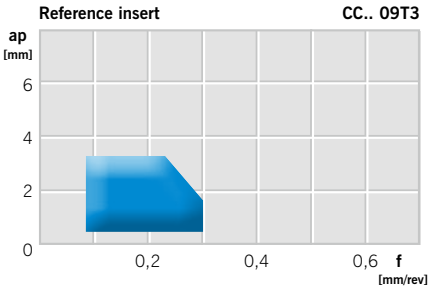

- PMS

Geometry for finishing to medium machining of steel.

Finishing and
medium machining
single sided

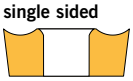

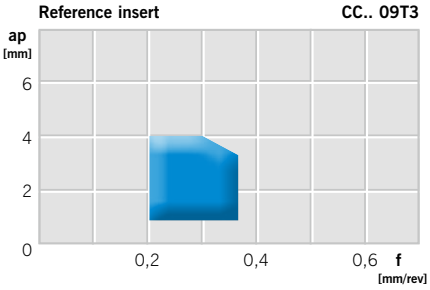

- PS2

Geometry for finishing steel, cast steel and stainless steel. Mini chip breaker for controlled chip breaking. Sharp cutting edge.

Finishing
single sided

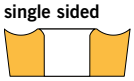

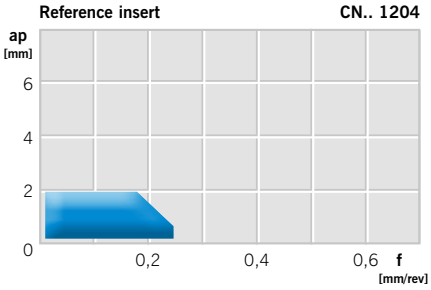

P Steel machining POSITIVE

- PF2

Due to the ground, polished insert surface, this geometry is especially suitable for finishing applications.The very sharp cutting edge and 10° positive cut offer excellent results and swarf control. Very small radii available.

Finishing
single sided

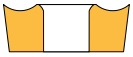

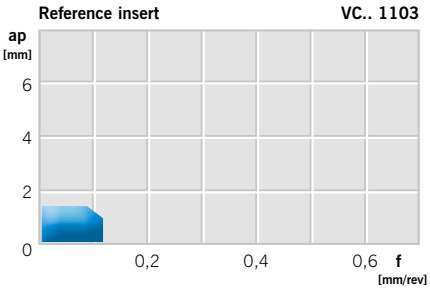

3

Please also consider our high positive geometries -AWI, -ASF, -ALU and -ACB as their coated versions offer excellent results for finishing steels and stainless steels as well as high temperature alloys.

-AWI

-ASF

-ALU

-ACB

M Stainless steel machining POSITIVE

- PS

Geometry for finishing stainless steels and heat resistant alloys with low feed rates and depth of cut. Controlled chip breaking. Low cutting forces. Periphery ground insert which is also suitable for nonferrous materials.

Finishing
single sided

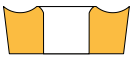

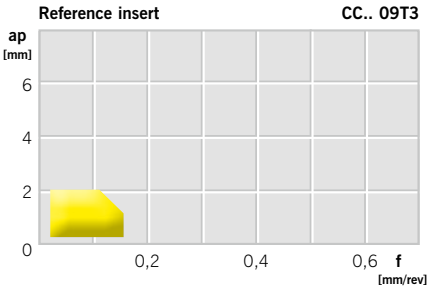

- AM

Chip breaker geometry for medium machining of steel, austenitic stainless steel and cast materials. Due to special chip pimples, very good chip control at low to medium depth of cut and feed rates. Smooth chip evacuation and low cutting forces.

Medium machining
single sided

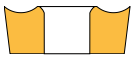

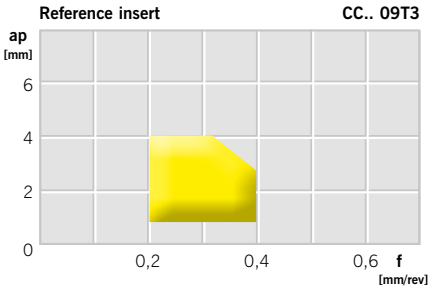

- AEC

Precision sintered geometry for finishing steel and stainless steel. Uncoated version also suitable for nonferrous materials.

Finishing
single sided

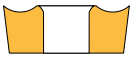

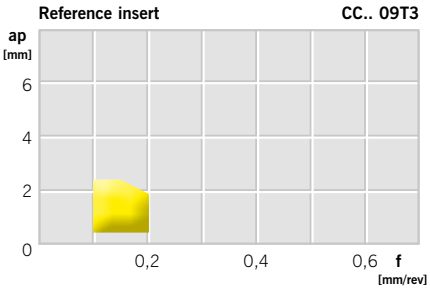

- PM1

Newly developed positive geometry for finishing and medium machining. This geometry is mostly suitable for steel and stainless steel. The double positive cutting edge ensures high reliability and excellent swarf evacuation. The wave shaped geometry offers excellent swarf control, even at high feed rates.

Finishing and
medium machining
single sided

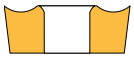

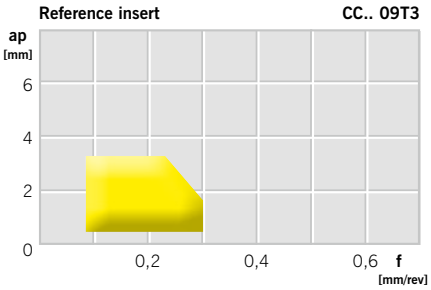

- WMS

Wiper geometry for machining steel. Extremely good surface finish due to wiper technology. Optimum chip breaking due to increased feed rates leading to reduced machine time and increased efficiency.

Finishing and
medium machining
single sided

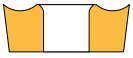

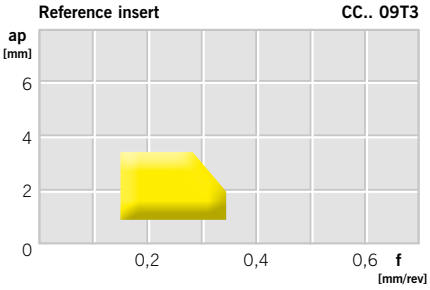

- PS2

Geometry for finishing steel, cast steel and stainless steel. Mini chip breaker for controlled chip breaking. Sharp cutting edge.

Finishing
single sided

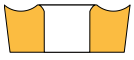

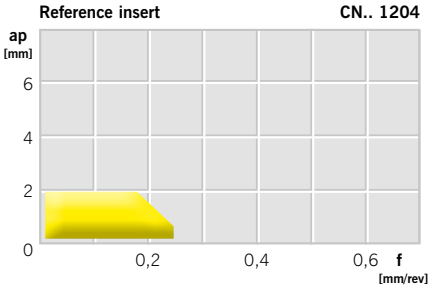

M Stainless steel machining POSITIVE

- PF2

Due to the ground, polished insert surface, this geometry is especially suitable for finishing applications.The very sharp cutting edge and 10° positive cut offer excellent results and swarf control. Very small radii available.

Finishing
single sided

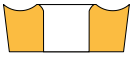

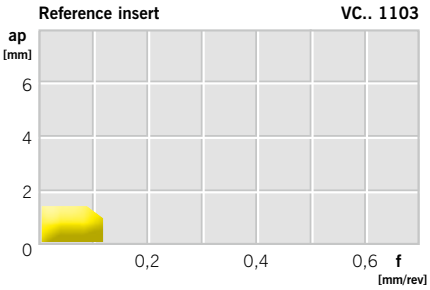

3

Please also consider our high positive geometries -AWI, -ASF, -ALU and -ACB as their coated versions offer excellent results for finishing steels and stainless steels as well as high temperature alloys.

-AWI

-ASF

-ALU

-ACB

N Nonferrous materials POSITIVE

- PS

Geometry for finishing stainless steels and heat resistant alloys with low feed rates and depth of cut. Controlled chip breaking. Low cutting forces. Periphery ground insert which is also suitable for nonferrous materials.

Finishing
single sided

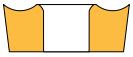

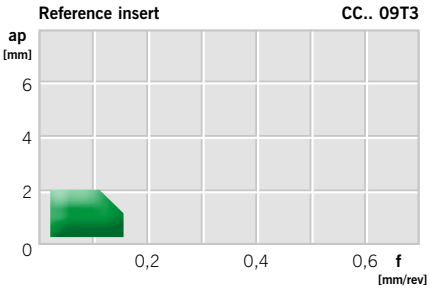

- AEC

Precision sintered geometry for finishing steel and stainless steel. As uncoated version also suitable for nonferrous materials.

Finishing
single sided

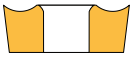

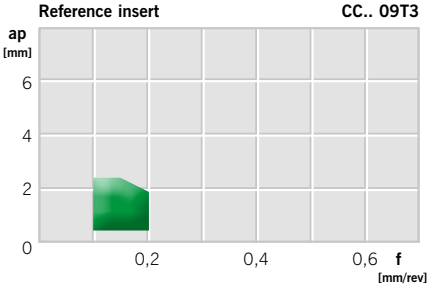

- PF2

Due to the ground and polished insert surface, this geometry is especially suitable for finishing applications.The very sharp cutting edge and 10° positive cut offer excellent results and swarf control. Very small radii available.

Finishing
single sided

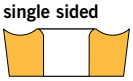

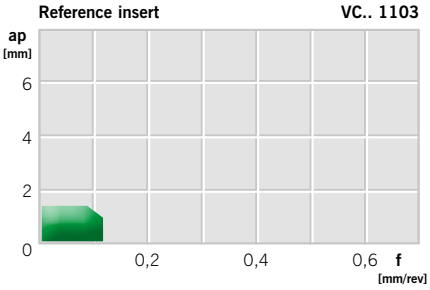

N Nonferrous materials HIGH POSITIVE

- AWI

Wiper geometry for finishing to roughing of aluminum and aluminum alloys. Also suitable for finishing stainless steel and exotic materials. Optimum chip breaking because of increased feed rates.

Finishing to Roughing
single sided

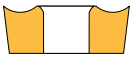

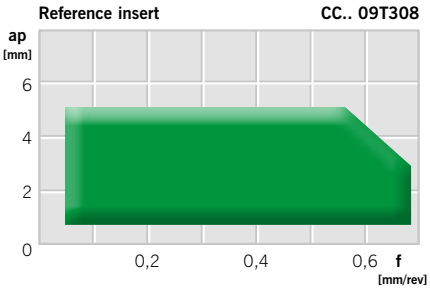

- ACB

Same application area as „-ALU“ geometry, however with optimized chip breaker. Special chip breaker for small chips.

Medium machining
single sided

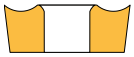

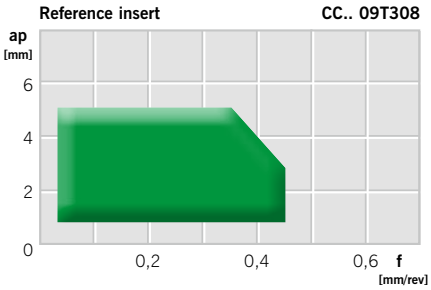

- ASF

Finishing geometry for machining aluminum, aluminum alloys and nonferrous materials. Also suitable for finishing stainless steel. Very low cutting forces due to sharp cutting edges and special chip breaker. Completely ground insert.

Finishing
single sided

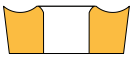

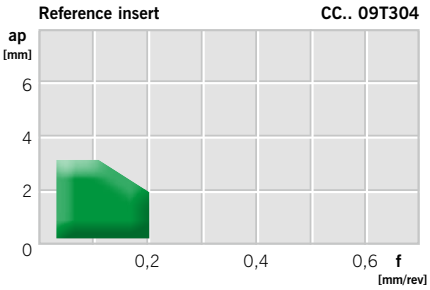

- ALU

Geometry for machining aluminum/alloys and nonferrous materials. Also suitable for finishing molybdenum, sintered steel or stainless steel. Very low cutting forces due to sharp cutting edges and special chip breaker. Excellent machining of unstable and thin-walled workpieces. Completely ground insert.

Medium machining
single sided

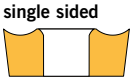

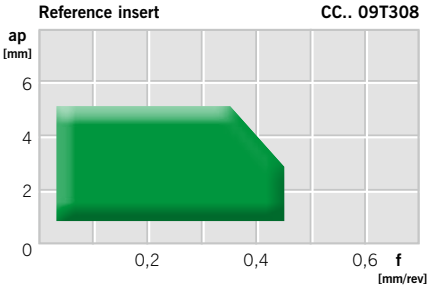

H Exotic materials NEGATIVE

- NFT

For finishing and semi-finish turning.
Main application area for exotic materials and high temperature titanium and nickel alloys. Can also be used for machining stainless steel. Rake angle 20°.

Finishing
double sided

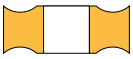

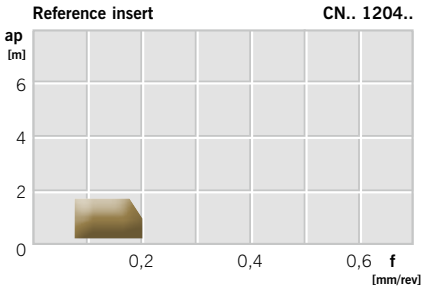

- NMT1

For medium and rough turning.
Main application area for exotic materials and high temperature titanium and nickel alloys. Can also be used for machining stainless steel. Rake angle 30°.

Medium to Roughing
double sided

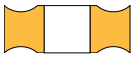

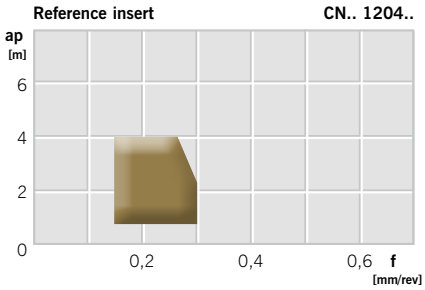

- NMT

For medium and rough turning.
Main application area for exotic materials and high temperature titanium and nickel alloys. Can also be used for machining stainless steel. Rake angle 10°.

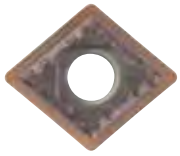

Medium to Roughing
single sided

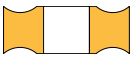

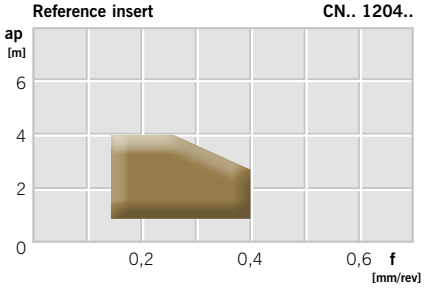

3

H Cermet NEGATIVE

- NWC

Wiper geometry for machining steel, cast steel, alloy steel and stainless steel. Suitable for finish to medium machining. Because of the wiper edge it has the potential to achieve the same finish at a doubled feed rate. Excellent swarf control.

Finishing and medium machining
double sided

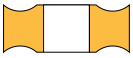

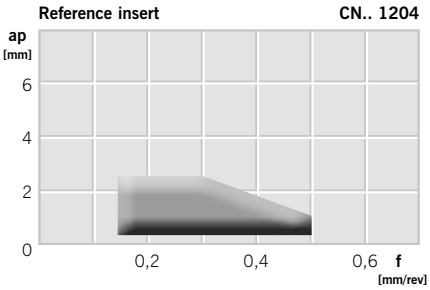

- NMC

Geometry for medium depth of cuts and feed rates. Very strong cutting edge, therefore very suitable for light interrupted cutting.

Medium to rough cutting
double sided

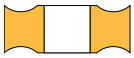

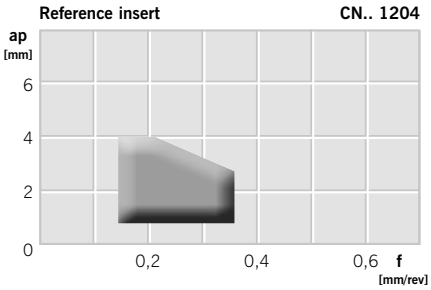

- AQ

Universal geometry for finishing to medium machining of steel, cast steel and stainless steel. Excellent surface finish and tolerance accuracy. Very good swarf control.

Finishing
double sided

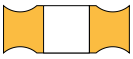

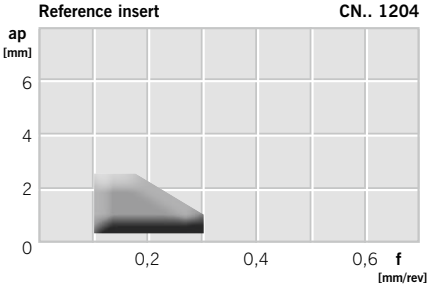

- B

Universal geometry for finishing up to medium machining in steel, cast steel and stainless steel. Suitable for general machining with feed rates of 0,15 bis 0,25mm/rev.

Finishing and medium machining
double sided

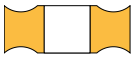

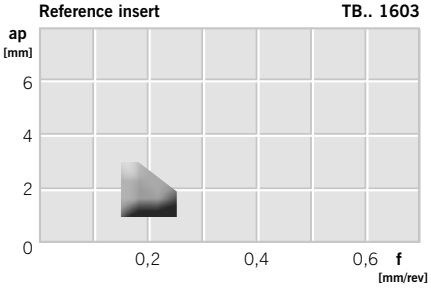

- NFC

Special geometry for finishing. Specially suitalbe for soft steel materials in connection with excellent chip breaking.

Finishing and medium machining
double sided

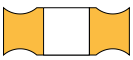

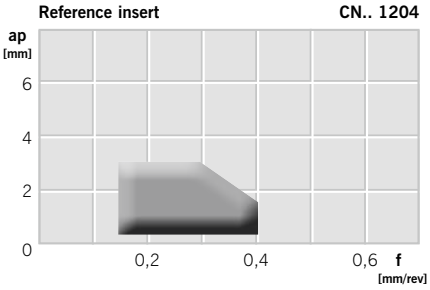

- C

Universal geometry for medium machining to roughing in steel, cast steel and stainless steel. Suitable for general machining with feed rates of 0,20 bis 0,35mm/rev.

Medium to rough cutting
double sided

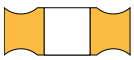

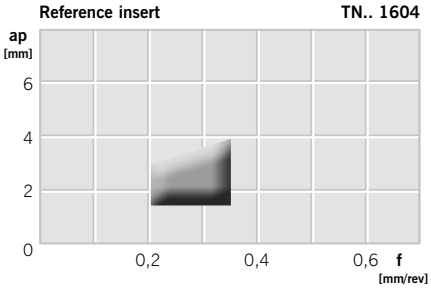

H Cermet POSITIVE

- AQ

Universal geometry for finishing to medium machining of steel, cast steel and stainless steel. Excellent surface finish and tolerance accuracy. Very good swarf control.

Finishing
single sided

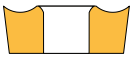

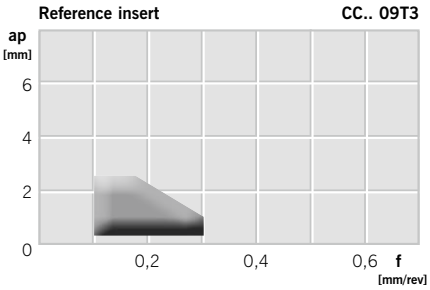

- PMC

Universal geometry for machining steel, cast steel, alloyed steel and stainless steel. Suitable for finish to medium machining. Because of the wide chip grooves good chip control is achieved in most applications.

Finishing and
medium machining
single sided

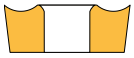

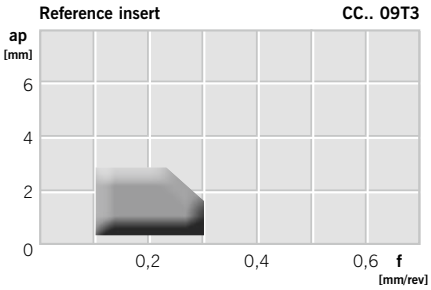

- FS

Universal geometry for finishing of steel, stainless steel and cast materials. Ground chip breaker for finishing applications. Low cutting forces, good chip control and excellent chip flow.

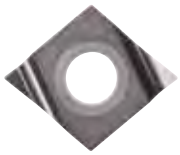

Finishing
single sided

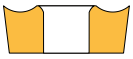

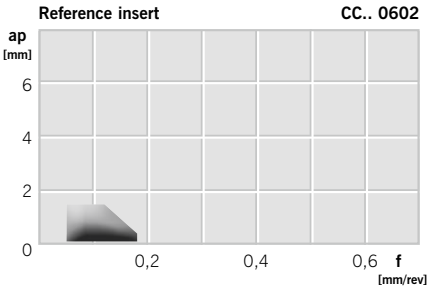

- S

Machining of steel, cast steel, cast iron with nodular graphite and sintered materials from medium machining up to light roughing. For medium chip cross sections and high cutting speeds under stable machining conditions.

Medium machining
to light roughing
single sided

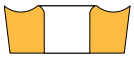

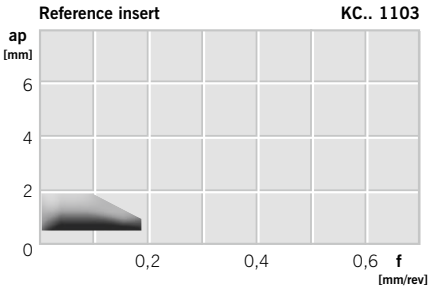

- G

For medium machining of steel, stainless steel and cast materials. Chip breaker for small chips.

Medium machining
single sided

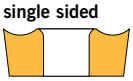

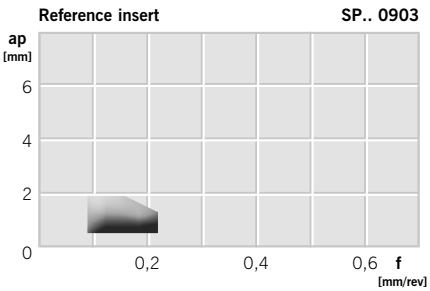

- U

Main application is steel machining. Good chip control at low feed rates and different cutting depths. Low cutting forces.

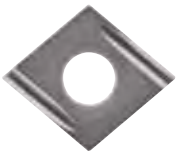

Finishing and
Medium machining
single sided

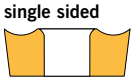

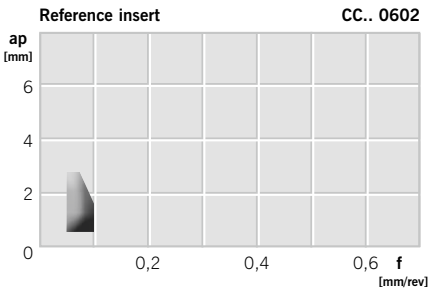

H Cermet POSITIVE

- Y

For medium machining of steel, stainless steel and cast materials. Sharp cutting edge for a good surface finish.

Medium machining
single sided

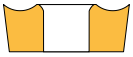

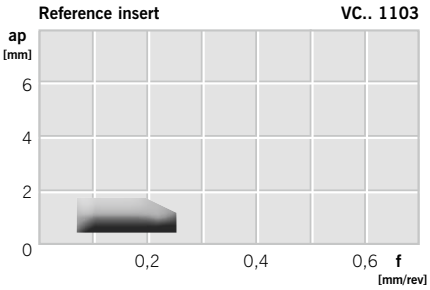

- Z

Positive geometry for finishing and medium machining of steel, cast steel and stainless steel. Ground circumferential chip breaker.

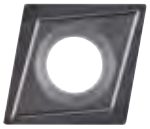

Finishing and medium machining
single sided

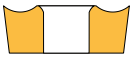

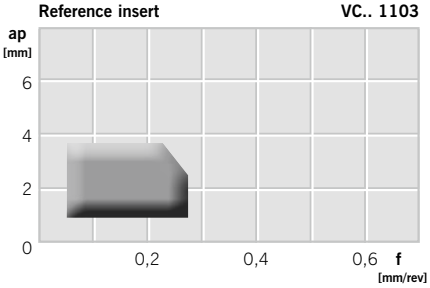

3

Additional Chip Breaker Geometries

		P	M	K	N	S	H
-18	High positive geometry for machining aluminum and nonferrous materials Ground chip breaker with 18° rake angle.				●		
-12	For copy turning of steel at medium feed rates and cutting depths. As secondary application also suitable for stainless steel.	●	○				
-11	Negative geometry for copy turning of steel and cast materials at low feed rates and cutting depths. Secondary application also in stainless steel. Ground chip breaker	●	○	●			
-A	Turning of steel, stainless steel and cast steel at medium to big chip cross sections.	●	●				
-AS	Coated version for steel and stainless steel. Uncoated insert performs excellent when machining aluminum and nonferrous materials.	●	●	○	●	○	○
-N11	Negative geometry for copy turning of steel and cast materials at low feed rates cutting depths. Secondary application in stainless steel. Molded chip breaker	●	○	●			
EN	Universal geometry in neutral execution for machining almost all materials (depending on coating).	●	●	●	●	●	
ER/EL	Geometry in left and right hand execution for medium machining of steel and stainless steel. Depending on coating it is suitable for almost all materials.	●	●	●	●	●	
FN	Periphery ground geometry with sharp edge. Main application in nonferrous materials. Coated version also suitable for stainless steel.	○	●		●		
TN	Geometry with chamfered cutting edge for heavy machining. The chamfer protects the edge from wear and breakouts. Depending on coating suitable for almost all common materials.	●	●	●	●	●	

Coated

AK2010
CVD-Multi layer coating
The main application area for this grade is the machining of all cast materials. It is also suitable for machining steel. The new substrate offers the necessary toughness and heat resistance, the CVD-coating (ARNO®-PowerTec), the wear resistance as well as added heat resistance ensure problem-free machining of cast iron, also with hard crust and at varying cutting depths.

AK2110
CVD-Multi layer coating
Grade for roughing of cast iron and nodular cast iron. AK2110 has excellent wear resistance and low tendency for build up edge. For the universal use on gray cast iron and ductile iron.

AK2310
CVD-Multi layer coating
Grade for machining cast iron and nodular cast iron. AK2310 has excellent wear resistance and a low tendency for build-up edge. Also suitable for universal machining of gray cast iron and ductile iron.

AK2320
CVD-Multi layer coating
Main application for machining cast iron and nodular cast iron. AK2320 offers good wear resistance and can be used in interrupted cuts. Also suitable for universal machining of gray cast iron and ductile iron.

AM2030
CVD-Multi layer coating
For stainless steel and high-temperature resistant alloys, alloyed and none-alloyed steel as well as titanium alloys. This grade gives high toughness as well as wear resistance. AM2030 is very similar to grade AM2035, however because of the special surface treatment (ARNO®-PowerTec) the swarf evacuation improves and the build up edge between the insert and the material is strongly reduced.

AM2035
CVD-Multi layer coating
First choice when machining difficult to cut austenitic stainless steel and high temperature alloys. AM2035 is also suitable for alloyed and none-alloyed stainless steel as well as titanium alloys. This grade offers extreme toughness and excellent wear resistance.

AM2110
CVD-Multi layer coating
For finishing of stainless steel. The very hard and micro fine coating give a very high tool life and improved wear resistance.

AM2130
CVD-Multi layer coating
Main grade for medium to heavy machining of stainless steel. The very hard and micro fine coating give a very high tool life and improved wear resistance. Also for suitable for interrupted cut.

AM5015
PVD-Multi layer coating
Wear resistant grade for machining steel, cast steel, stainless steel and high temperature alloys (super alloys).

AM5020
PVD-Beschichtung
This grade is ideal for finishing of stainless steel and high temperature steel. Apply grade AM5020 when finish turning difficult to machine materials at medium cutting speeds. The grade has high toughness combined with good wear resistance.

AM5025
PVD-Multi layer coating
Ideal grade for finish to medium machining of stainless steel, temperature resistant steel and titanium (alloys). AM5025 has very good toughness and good wear resistance and can be used both at varied cutting depths and interupted cutting.

AM5110
PVD-Multi layer coating
Grade for finish machining of stainless steel, nickel and titanium alloys as well as exotic materials. Also for abrasive and hard materials such as CoCrMo and chilled cast iron.

AM5120
PVD-Multi layer coating
The grade for roughing stainless steel and machining of exotic and heat resistant materials as well es titanium alloys.

AM5120+
PVD-Multi layer coating
Suitable for medium and roughing of tough exotic materials such as E-cu, molybdenum, nickel, pure iron, Inconel and stainless steel.

AM5130
PVD-Multi layer coating
Universal grade for medium machining of stainless steels and alloyed steels as well as exotic materials.

AM5220
PVD-Multi layer coating
High wear resistant grade for machining steel, cast steel, stainless steel and high temperature super alloys.

AP2025
CVD-Multi layer coating
This multi purpose grade excels due to its versatile application area in steel and cast materials. It is also very suitable for machining stainless steel, heat resistant alloys and titanium alloys. Because of its high toughness and wear resistance this is the optimum general purpose grade for your production.

AP2030
CVD-Multi layer coating
The main application area of this grade is machining steel. It is also suitable for stainless steel. This grade offers highest production security and tool life even on problematic materials. AP2030 is very similar to grade AP2035, however because of the special surface treatment (ARNO®-PowerTec) the swarf evacuation improves and the build up edge between the insert and the material is strongly reduced. AP2030 is safe and reliable.

AP2035
CVD-Multi layer coating
When the cutting conditions are poor, interrupted cutting, unstable conditions or poor material surface quality, the grade AP2035 is your first choice. It can also be used in stainless steel. This grade has extreme high toughness and good wear resistance.

AP2110
CVD-Multi layer coating
Premium grade for “high speed” machining of steel. Also suitable for roughing of cast iron and nodular cast iron.

AP2120
CVD-Multi layer coating
Grade for finishing and medium machining of steel in both uninterrupted and heavy interrupted cutting conditions. Excellent resistance to plastic deformation as well as fracturing. The alloyed carbide substrate with a fine grained aluminium oxide coating ensures high thermal resistance and excellent coating structure. AP2120 is the universal grade for steel machining.

AP2135
CVD-Multi layer coating
Grade for heavy roughing applications in steel materials. Extremely tough for heavy interrupted cuts and unfavorable conditions. The alloyed carbide substrate with the fine grained aluminium oxide coating ensures high thermal resistance and excellent coating structure.

AP2310
CVD-Multi layer coating
Replacement grade for AP2110. Grade for finishing steel. New coating technology unseres less wear and longer tool life.

AP2320
CVD-Multi layer coating
Replacement grade for AP2120. Grade for cutting steel. Coating against plastic deformation with high tensile strength for medium machining.

AP2335
CVD-Multi layer coating
Replacement grade for AP2135. Grade for cutting steel. Extremely tough grade for interrupted cuts and unfavorable machining conditions in roughing applications.

AP5210
PVD-Multi layer coating
Medium to light machining of exotic materials, titanium, titanium alloys, nickel alloys, machining of abrasive and hard materials such as CoCrMo or chilled cast iron. Finishing of steel and stainless steel.

AL10
PVD-Multi layer coating
Extremly wear resistant grade for machining steel materials, cast iron and stainless steel. Due to high hardness of the coating, high wear resistance can be achieved. Specially suitable for high cutting speeds.

AM15C
CVD-Multi layer coating
Machining of alloyed steel and stainless steel as well as cast steel, for finishing at high cutting speeds under favorable machining conditions.

AM25C
CVD-Multi layer coating
Light to medium machining of steel and cast steel at medium cutting speeds and chip cross sections.

AM350

CVD-Multi layer coating

Grade with a good combination of wear resistance and toughness for turning steel, stainless steel as well as cast steel at medium chip cross sections and medium to high cutting speeds. Can also be used under unfavorable machining conditions. Special grade for stainless steel (austenitic).

AM35C

CVD-Multi layer coating

Grade with a good combination of wear resistance and toughness for machining steel, stainless steel as well as cast steel at medium to large chip cross sections and medium cutting speeds under unfavorable machining conditions.

AR27C

CVD-Multi layer coating

High wear resistant carbide grade for machining steel, cast steel, spheroidal cast iron and malleable cast iron at small to medium chip cross sections and high cutting speeds under stable machining conditions.

AR270

CVD-Multi layer coating

Grade with good wear resistance and cutting edge stability for light to medium roughing of steel as well as austenitic steel. Medium to high cutting speeds at large chip cross sections under less favorable machining conditions. Finishing to medium cutting of cast iron, malleable cast iron at medium to high cutting speeds.

AR370

CVD-Multi layer coating

Very resistant grade against mechanical stresses and excellent cutting edge stability. Light to medium roughing of steel, cast steel (ferritic and martensitic), stainless steel at medium to large chip cross sections and medium cutting speeds under unfavorable machining conditions, interrupted cuts and forged parts.

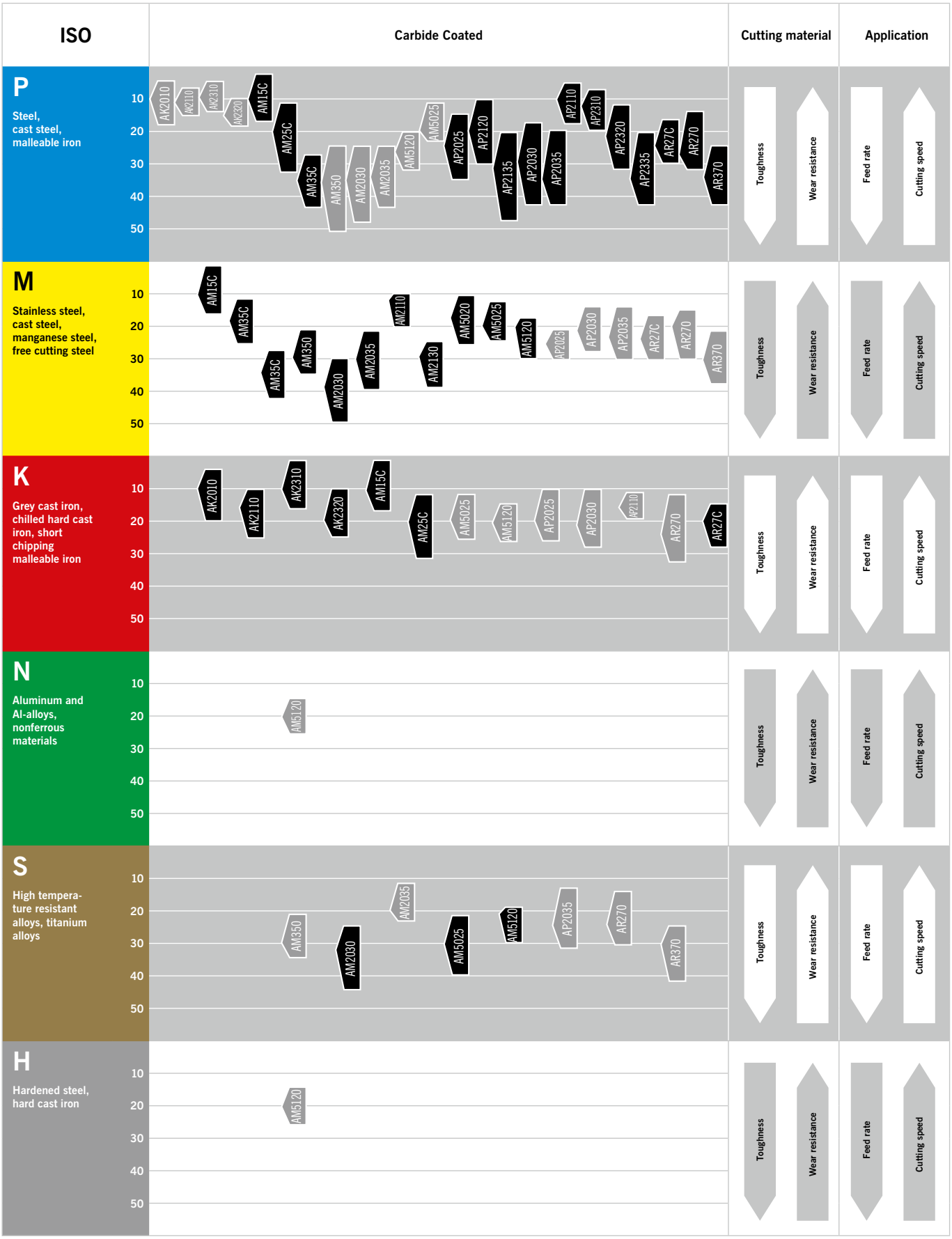

Main application area

AM5025 — Grade
Recommended application area

Secondary application area

AM5025 — Grade
Recommended application area

3

Uncoated

AK1010

Carbide grade for machining of all cast materials, aluminum and aluminum alloys, copper and copper alloys, bronze and brass as well as refractory metals (e.g. niob, tantalum, titanium, molybdenum, tungsten) at medium chip cross sections and at favorable cutting conditions.

AK1020

Ideal grade for finishing of nonferrous materials such as aluminum (and aluminum alloys), copper (and alloys), bronze, brass and non metallic materials with a smooth cut and/or light varying cutting depths.

AK10

Carbide grade for machining all cast iron materials, Ti and Ti-alloys at medium chip cross sections under favorable machining conditions.

AK20

Carbide grade with higher toughness as AK10 for machining all cast iron materials at medium chip cross sections under unfavorable machining conditions.

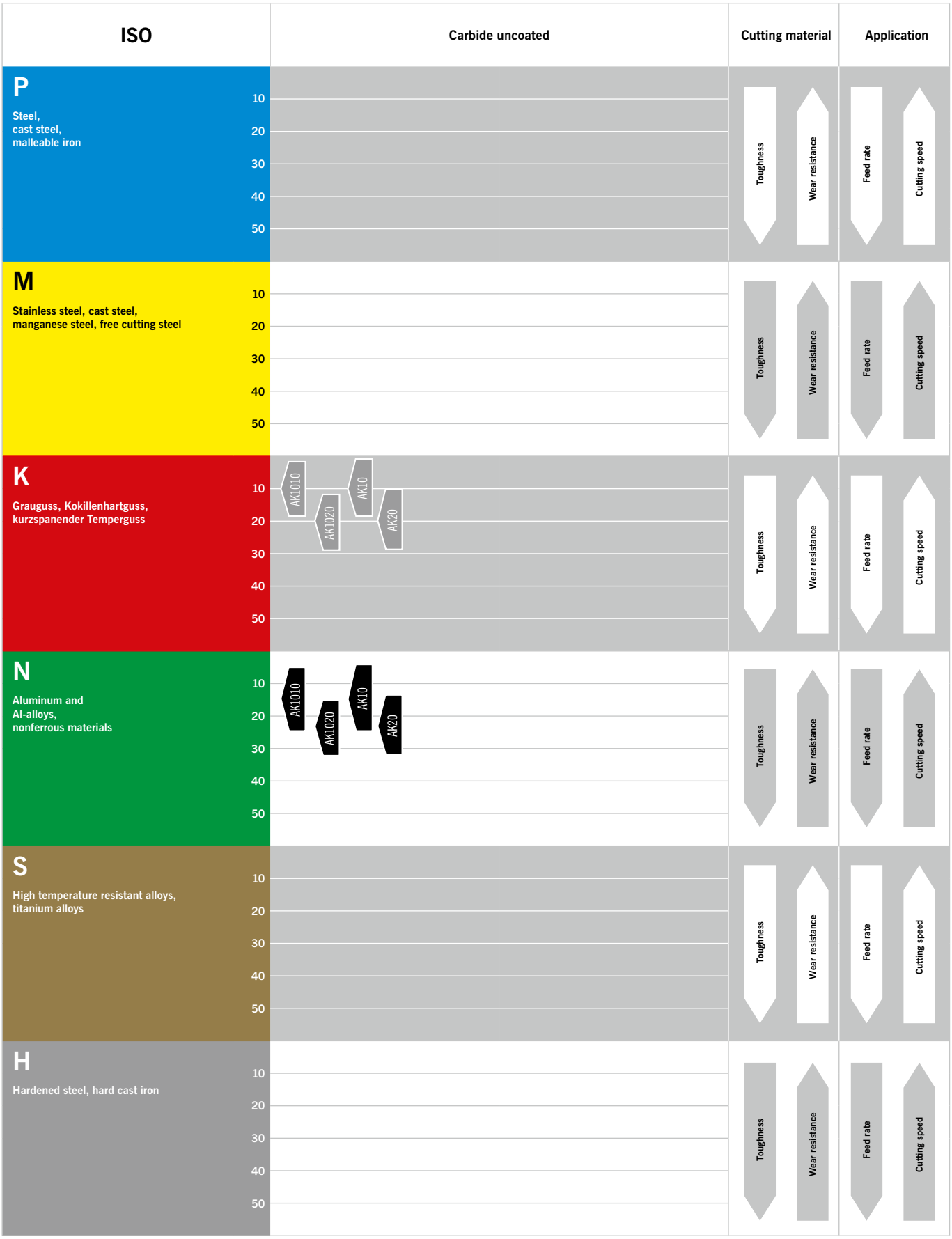

Main application area

AM5025 — Grade
Recommended application area

Secondary application area

AM5025 — Grade
Recommended application area

3

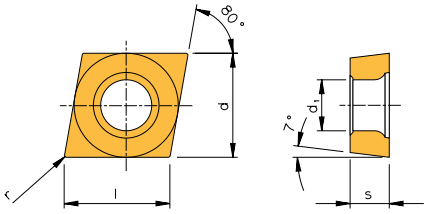

CC..

Designation	l	d	s	d_1	r	PG
CCGT 0602005FN-PS	6,45	6,350	2,38	2,8	0,05	3
CCGT 060201FN-PS	6,45	6,350	2,38	2,8	0,1	3
CCGT 060202FN-PS	6,45	6,350	2,38	2,8	0,2	3
CCGT 060204FN-PS	6,45	6,350	2,38	2,8	0,4	3
CCGT 09T3005FN-PS	9,67	9,525	3,97	4,4	0,05	3
CCGT 09T301FN-PS	9,67	9,525	3,97	4,4	0,1	3
CCGT 09T302FN-PS	9,67	9,525	3,97	4,4	0,2	3
CCGT 09T304FN-PS	9,67	9,525	3,97	4,4	0,4	3
CCGT 060204FN-ALU	6,45	6,350	2,38	2,8	0,4	22
CCGT 120404FN-ALU	12,90	12,70	4,76	5,5	0,4	22
CCGT 060204FN-ACB	6,45	6,350	2,38	2,8	0,4	22
CCGT 09T304EN-ACB	9,67	9,525	3,97	4,4	0,4	22
CCGT 09T304FN-ACB	9,67	9,525	3,97	4,4	0,4	22
CCGT 09T308EN-ACB	9,67	9,525	3,97	4,4	0,8	22
CCGT 09T308FN-ACB	9,67	9,525	3,97	4,4	0,8	22
CCGT 120404EN-ACB	12,90	12,70	4,76	5,5	0,4	22
CCGT 120408EN-ACB	12,90	12,70	4,76	5,5	0,8	22
CCGT 060201EN-ASF	6,45	6,350	2,38	2,8	0,1	22
CCGT 060202EN-ASF	6,45	6,350	2,38	2,8	0,2	22
CCGT 060202FN-ASF	6,45	6,350	2,38	2,8	0,2	22
CCGT 060204EN-ASF	6,45	6,350	2,38	2,8	0,4	22
CCGT 060204FN-ASF	6,45	6,350	2,38	2,8	0,4	22
CCGT 09T302EN-ASF	9,67	9,525	3,97	4,4	0,2	22
CCGT 09T304EN-ASF	9,67	9,525	3,97	4,4	0,4	22
CCGT 09T304FN-ASF	9,67	9,525	3,97	4,4	0,4	22
CCGT 09T308FN-ASF	9,67	9,525	3,97	4,4	0,8	22
CCGW 060202FN	6,45	6,350	2,38	2,8	0,2	3
CCGW 060204FN	6,45	6,350	2,38	2,8	0,4	3
CCGW 09T304FN	9,67	9,525	3,97	4,4	0,4	3
CCGW 09T308FN	9,67	9,525	3,97	4,4	0,8	3
CCGX 060200FL	6,45	6,350	2,38	2,8	0,0	3
CCGX 060200FR	6,45	6,350	2,38	2,8	0,0	3
CCGX 060201FL	6,45	6,350	2,38	2,8	0,1	3
CCGX 060201FR	6,45	6,350	2,38	2,8	0,1	3
CCGX 060202FL	6,45	6,350	2,38	2,8	0,2	3
CCGX 060202FR	6,45	6,350	2,38	2,8	0,2	3
CCGX 060204FL	6,45	6,350	2,38	2,8	0,4	3
CCGX 060204FR	6,45	6,350	2,38	2,8	0,4	3
CCGX 09T300FL	9,67	9,525	3,97	4,4	0,0	3
CCGX 09T300FR	9,67	9,525	3,97	4,4	0,0	3
CCGX 09T301FL	9,67	9,525	3,97	4,4	0,1	3
CCGX 09T301FR	9,67	9,525	3,97	4,4	0,1	3
CCGX 09T302FL	9,67	9,525	3,97	4,4	0,2	3
CCGX 09T302FR	9,67	9,525	3,97	4,4	0,2	3
CCGX 09T304FL	9,67	9,525	3,97	4,4	0,4	3
CCGX 09T304FR	9,67	9,525	3,97	4,4	0,4	3

Dimensions in mm

Grade availability									
	coated					uncoated			
AM5015	AM5025	AM5110	AM5120+	AP5210	AK1010	AK1020	AK20	Designation
					X	X		CCGT 0602005FN-PS
	X				X	X		CCGT 060201FN-PS
	X				X	X		CCGT 060202FN-PS
	X				X	X		CCGT 060204FN-PS
					X	X		CCGT 09T3005FN-PS
	X				X	X		CCGT 09T301FN-PS
	X				X	X		CCGT 09T302FN-PS
	X				X	X		CCGT 09T304FN-PS
				X				CCGT 060204FN-ALU
				X				CCGT 120404FN-ALU
				X				CCGT 060204FN-ACB
			X					CCGT 09T304EN-ACB
				X				CCGT 09T304FN-ACB
			X					CCGT 09T308EN-ACB
				X				CCGT 09T308FN-ACB
			X					CCGT 120404EN-ACB
			X					CCGT 120408EN-ACB
X								CCGT 060201EN-ASF
X	X							CCGT 060202EN-ASF
		X						CCGT 060202FN-ASF
X	X							CCGT 060204EN-ASF
		X						CCGT 060204FN-ASF
X	X							CCGT 09T302EN-ASF
X	X							CCGT 09T304EN-ASF
		X						CCGT 09T304FN-ASF
		X						CCGT 09T308FN-ASF
						X		CCGW 060202FN
						X		CCGW 060204FN
						X		CCGW 09T304FN
						X		CCGW 09T308FN
	X						X	CCGX 060200FL
	X						X	CCGX 060200FR
	X						X	CCGX 060201FL
	X						X	CCGX 060201FR
	X						X	CCGX 060202FL
	X						X	CCGX 060202FR
	X						X	CCGX 060204FL
	X						X	CCGX 060204FR
	X						X	CCGX 09T300FL
	X						X	CCGX 09T300FR
	X						X	CCGX 09T301FL
	X						X	CCGX 09T301FR
	X						X	CCGX 09T302FL
	X						X	CCGX 09T302FR
	X						X	CCGX 09T304FL
	X						X	CCGX 09T304FR

P	●		○		●					P
M	●	●	●	○	○					M
K	○		○		●	○	○	○		K
N			○	●		●	●	●		N
S	●	●	●	●	●					S
H	○		○							H

X Available grade

● Main application

○ 2nd application

3

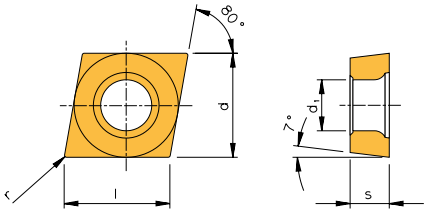

CC..

Designation	l	d	s	d_1	r	PG
CCMT 060202EN-AM	6,45	6,350	2,38	2,8	0,2	3
CCMT 060204EN-AM	6,45	6,350	2,38	2,8	0,4	3
CCMT 060208EN-AM	6,45	6,350	2,38	2,8	0,8	3
CCMT 09T302EN-AM	9,67	9,525	3,97	4,4	0,2	3
CCMT 09T304EN-AM	9,67	9,525	3,97	4,4	0,4	3
CCMT 09T308EN-AM	9,67	9,525	3,97	4,4	0,8	3
CCMT 120404EN-AM	12,90	12,70	4,76	5,5	0,4	3
CCMT 120408EN-AM	12,90	12,70	4,76	5,5	0,8	3
CCMT 060202EN-PM1	6,45	6,350	2,38	2,8	0,2	3
CCMT 060204EN-PM1	6,45	6,350	2,38	2,8	0,4	3
CCMT 09T302EN-PM1	9,67	9,525	3,97	4,4	0,2	3
CCMT 09T304EN-PM1	9,67	9,525	3,97	4,4	0,4	3
CCMT 09T308EN-PM1	9,67	9,525	3,97	4,4	0,8	3
CCMT 120404EN-PM1	12,90	12,70	4,76	5,5	0,4	3
CCMT 120408EN-PM1	12,90	12,70	4,76	5,5	0,8	3
CCMT 060202EN-PS2	6,45	6,350	2,38	2,8	0,2	3
CCMT 060204EN-PS2	6,45	6,350	2,38	2,8	0,4	3
CCMT 09T302EN-PS2	9,67	9,525	3,97	4,4	0,2	3
CCMT 09T304EN-PS2	9,67	9,525	3,97	4,4	0,4	3
CCXT 060202EN-AEC	6,45	6,350	2,38	2,8	0,2	3
CCXT 060204EN-AEC	6,45	6,350	2,38	2,8	0,4	3
CCXT 09T302EN-AEC	9,67	9,525	3,97	4,4	0,2	3
CCXT 09T304EN-AEC	9,67	9,525	3,97	4,4	0,4	3
CCXT 09T308EN-AEC	9,67	9,525	3,97	4,4	0,8	3
CCXT 120404EN-AEC	12,90	12,70	4,76	5,5	0,4	3
CCXT 120408EN-AEC	12,90	12,70	4,76	5,5	0,8	3

Dimensions in mm

Grade availability

coated

AK2110	AM2110	AM2130	AM5020	AM5110	AM5120	AP2110	AP2120	AP2310	AP2320	AP2335	Designation
		X			X			X	X	X	CCMT 060202EN-AM
		X			X			X	X	X	CCMT 060204EN-AM
		X			X			X	X	X	CCMT 060208EN-AM
		X		X	X			X	X	X	CCMT 09T302EN-AM
		X			X			X	X	X	CCMT 09T304EN-AM
		X			X			X	X	X	CCMT 09T308EN-AM
		X			X			X	X	X	CCMT 120404EN-AM
		X			X			X	X	X	CCMT 120408EN-AM
X		X		X	X	X	X				CCMT 060202EN-PM1
X		X		X	X			X	X		CCMT 060204EN-PM1
		X		X	X			X	X		CCMT 09T302EN-PM1
X	X	X		X	X	X			X		CCMT 09T304EN-PM1
X		X		X	X	X			X		CCMT 09T308EN-PM1
		X							X		CCMT 120404EN-PM1
		X					X				CCMT 120408EN-PM1
		X		X	X			X	X		CCMT 060202EN-PS2
		X		X	X			X	X		CCMT 060204EN-PS2
		X		X	X			X	X		CCMT 09T302EN-PS2
		X		X	X			X	X		CCMT 09T304EN-PS2
			X								CCXT 060202EN-AEC
			X								CCXT 060204EN-AEC
			X								CCXT 09T302EN-AEC
			X								CCXT 09T304EN-AEC
			X								CCXT 09T308EN-AEC
			X								CCXT 120404EN-AEC
			X								CCXT 120408EN-AEC
○			○	○	○	●	●	●	●	●	P
	●	●	●	●	●						M
●				○	○	○					K
				○	○						N
				●	●						S
				○	○						H

X Available grade

● Main application

○ 2nd application

3

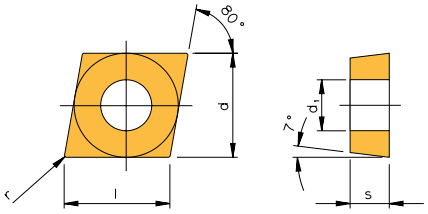

CCMX

Designation	l	d	s	d_1	r	PG	Grade availability coated AM2030	AP2030	AM35C
CCMX 120404EN	12,90	12,700	4,76	5,5	0,4	3			X
CCMX 120408EN	12,90	12,700	4,76	5,5	0,8	3			X
CCMX 09T304EN-WMS	9,67	9,525	3,97	4,4	0,4	3	X		
CCMX 09T308EN-WMS	9,67	9,525	3,97	4,4	0,8	3		X	

X Available grade
● Main application
○ 2nd application

	AM2030	AP2030	AM35C
P		●	●
M	●	○	○
K		○	
N			
S	○		
H			

Application reference on WIPER geometries on pages 276-277

3

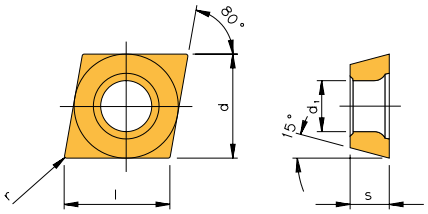

CD..

Designation	l	d	s	d_1	r	PG	Grade availability coated AM15C	uncoated AK20
CDGT 040101FL	4,03	3,97	1,0	2,1	0,1	3	X	
CDGT 040101FR	4,03	3,97	1,0	2,1	0,1	3	X	
CDGT 040102FL	4,03	3,97	1,0	2,1	0,2	3	X	X
CDGT 040102FR	4,03	3,97	1,0	2,1	0,2	3	X	X
CDGT 040104FL	4,03	3,97	1,0	2,1	0,4	3	X	
CDGT 040104FR	4,03	3,97	1,0	2,1	0,4	3	X	
CDGW 040102EN	4,03	3,97	1,0	2,1	0,2	3	X	X

Attention: Designation does not correspond with ISO-designation

X Available grade
● Main application
○ 2nd application

	AM15C	AK20
P	○	
M	●	
K	○	○
N		●
S		
H		

Dimensions in mm

ARNO® SIM-Boring Bars
for internal machining.

ARNO® SIM-BORING BARS

The modular internal grooving system in 4 different sizes starting at a minimum bore of 7,8mm.

- Vibration reduced carbide shank with brazed steel head
- Internal coolant
- Shank with 2 clamping surfaces
- Highest stability through oval shaped shank
- Reach into bore up to 80mm
- Grooving depths up to 4,5mm
- Grooving widths from 0,8 – 4mm
- Inserts with harmonized PVD coating

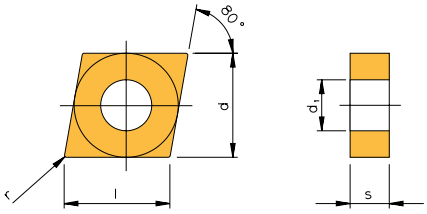

CN..

Designation	l	d	s	d_1	r	PG
CNGP 120402FN-EX	12,90	12,70	4,76	5,5	0,2	40
CNGP 120404FN-EX	12,90	12,70	4,76	5,5	0,4	40
CNGP 120408FN-EX	12,90	12,70	4,76	5,5	0,8	40
CNMG 120404EN-NM2	12,90	12,70	4,76	5,5	0,4	40
CNMG 120408EN-NM2	12,90	12,70	4,76	5,5	0,8	40
CNMG 120412EN-NM2	12,90	12,70	4,76	5,5	1,2	40
CNMG 160608EN-NM2	16,10	15,875	6,35	6,35	0,8	2
CNMG 120408EN-NMG1	12,90	12,70	4,76	5,5	0,8	40
CNMG 120412EN-NMG1	12,90	12,70	4,76	5,5	1,2	40
CNMG 160612EN-NMG1	16,10	15,875	6,35	6,35	1,2	2
CNMG 190612EN-NMG1	19,30	19,05	6,35	7,94	1,2	2
CNMG 190616EN-NMG1	19,30	19,05	6,35	7,94	1,6	2
CNMG 120404EN-NMR	12,90	12,70	4,76	5,5	0,4	40
CNMG 120408EN-NMR	12,90	12,70	4,76	5,5	0,8	40
CNMG 120412EN-NMR	12,90	12,70	4,76	5,5	1,2	40
CNMG 120404EN-NS1	12,90	12,700	4,76	5,5	0,4	40
CNMG 120408EN-NS1	12,90	12,700	4,76	5,5	0,8	40
CNMG 120404EN-VA	12,90	12,70	4,76	5,5	0,4	40
CNMG 120408EN-VA	12,90	12,70	4,76	5,5	0,8	40
CNMM 120408EN-NR1	12,90	12,70	4,76	5,5	0,8	2
CNMM 120412EN-NR1	12,90	12,70	4,76	5,5	1,2	2
CNMM 160612EN-NR1	16,10	15,875	6,35	6,35	1,2	2
CNMM 190616EN-NR1	19,30	19,05	6,35	7,94	1,6	2
CNMG 120404EN-NFT	12,90	12,70	4,76	5,5	0,4	40
CNMG 120408EN-NFT	12,90	12,70	4,76	5,5	0,8	40
CNMG 120404EN-NMT	12,90	12,70	4,76	5,5	0,4	40
CNMG 120408EN-NMT	12,90	12,70	4,76	5,5	0,8	40
CNMG 120412EN-NMT	12,90	12,70	4,76	5,5	1,2	40
CNMG 120408EN-NMT1	12,90	12,70	4,76	5,5	0,8	40
CNMG 120412EN-NMT1	12,90	12,70	4,76	5,5	1,2	40

Dimensions in mm

Grade availability

	coated																		uncoated		
	AK2010	AK2110	AK2320	AM2035	AM2110	AM2130	AM5025	AM5110	AM5120	AM5130	AP2025	AP2035	AP2110	AP2120	AP2135	AP2310	AP2320	AP2335	AK1010	AK1020	Designation
							X													X	CNGP 120402FN-EX
							X													X	CNGP 120404FN-EX
							X													X	CNGP 120408FN-EX
						X			X				X				X				CNMG 120404EN-NM2
						X			X							X	X				CNMG 120408EN-NM2
						X			X								X				CNMG 120412EN-NM2
						X											X	X			CNMG 160608EN-NM2
		X				X			X							X	X	X			CNMG 120408EN-NMG1
		X				X			X						X		X				CNMG 120412EN-NMG1
			X			X									X		X				CNMG 160612EN-NMG1
						X											X	X			CNMG 190612EN-NMG1
						X								X	X						CNMG 190616EN-NMG1
					X	X			X												CNMG 120404EN-NMR
					X	X			X												CNMG 120408EN-NMR
						X			X												CNMG 120412EN-NMR
					X								X	X							CNMG 120404EN-NS1
					X								X	X							CNMG 120408EN-NS1
				X					X			X							X		CNMG 120404EN-VA
				X					X										X		CNMG 120408EN-VA
						X								X				X			CNMM 120408EN-NR1
						X									X						CNMM 120412EN-NR1
						X								X				X			CNMM 160612EN-NR1
						X								X	X			X			CNMM 190616EN-NR1
						X		X	X												CNMG 120404EN-NFT
						X		X	X												CNMG 120408EN-NFT
						X															CNMG 120404EN-NMT
						X		X	X	X											CNMG 120408EN-NMT
						X		X	X	X											CNMG 120412EN-NMT
						X		X	X												
						X		X	X												CNMG 120408EN-NMT1
																					CNMG 120412EN-NMT1

	AK2010	AK2110	AK2320	AM2035	AM2110	AM2130	AM5025	AM5110	AM5120	AM5130	AP2025	AP2035	AP2110	AP2120	AP2135	AP2310	AP2320	AP2335	AK1010	AK1020	
P	○	○	○	○					○		●	●	●	●	●	●	●	●			P
M				●	●	●	●	●	●	●	○	○									M
K	●	●	●						○		●		○						○	○	K
N									○										●	●	N
S				●		○	●	●	●	●											S
H									○												H

X Available grade

● Main application

○ 2nd application

3

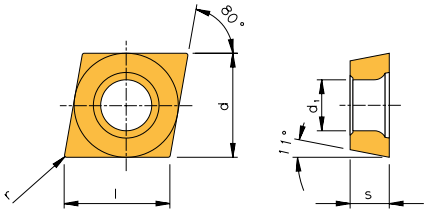

CP..

Designation	l	d	s	d_1	r	PG	AM5025	AM15C	AM25C	AK20
							Grade availability			
							coated			uncoated
CPET 05T102FR	5,60	5,56	1,98	2,5	0,2	3		X		
CPGT 05T102EN	5,60	5,56	1,98	2,5	0,2	3		X		
CPGT 05T104EN	5,60	5,56	1,98	2,5	0,4	3		X		
CPGT 05T102EN-ASF	5,60	5,56	1,98	2,5	0,2	22	X			
CPGT 05T104EN-ASF	5,60	5,56	1,98	2,5	0,4	22	X			
CPGW 05T102EN	5,60	5,56	1,98	2,5	0,2	3		X		
CPMT 05T102EN	5,60	5,56	1,98	2,5	0,2	3	X		X	X
CPMT 05T104EN	5,60	5,56	1,98	2,5	0,4	3	X		X	

X Available grade
● Main application
○ 2nd application

	AM5025	AM15C	AM25C	AK20
P		○	●	
M	●	●		
K		○	○	○
N				●
S	●			
H				

3

Dimensions in mm

ARNO Shark-CUT®

Drilling and Turning with only One Tool.

ARNO SHARK-CUT®

Specially developed multi purpose tool for turning and drilling.

- Problem solver when open slots in turret are limited
- Less programming
- Shorter set-up time
- Reduced preset time
- Reduced inventory of tools and inserts
- Lower cost for buying tools

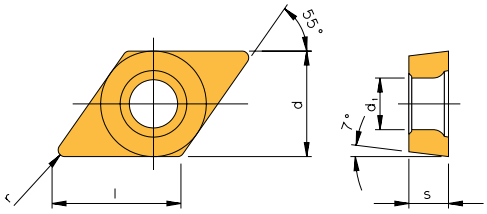

DC..

Designation	l	d	s	d_1	r	PG
DCGT 0702005FN-PS	7,75	6,35	2,38	2,8	0,05	3
DCGT 070201FN-PS	7,75	6,35	2,38	2,8	0,1	3
DCGT 070202FN-PS	7,75	6,35	2,38	2,8	0,2	3
DCGT 070204FN-PS	7,75	6,35	2,38	2,8	0,4	3
DCGT 11T3005FN-PS	11,60	9,525	3,97	4,4	0,05	3
DCGT 11T301FN-PS	11,60	9,525	3,97	4,4	0,1	3
DCGT 11T302FN-PS	11,60	9,525	3,97	4,4	0,2	3
DCGT 11T304FN-PS	11,60	9,525	3,97	4,4	0,4	3
DCGT 070201EN-ASF	7,75	6,35	2,38	2,8	0,1	22
DCGT 070202EN-ASF	7,75	6,35	2,38	2,8	0,2	22
DCGT 070202FN-ASF	7,75	6,35	2,38	2,8	0,2	22
DCGT 070204EN-ASF	7,75	6,35	2,38	2,8	0,4	22
DCGT 070204FN-ASF	7,75	6,35	2,38	2,8	0,4	22
DCGT 11T301EN-ASF	11,60	9,525	3,97	4,4	0,1	22
DCGT 11T302EN-ASF	11,60	9,525	3,97	4,4	0,2	22
DCGT 11T304EN-ASF	11,60	9,525	3,97	4,4	0,4	22
DCGT 11T304FN-ASF	11,60	9,525	3,97	4,4	0,4	22
DCGT 11T308EN-ASF	11,60	9,525	3,97	4,4	0,8	22
DCGW 070202FN	7,75	6,35	2,38	2,8	0,2	3
DCGW 070204FN	7,75	6,35	2,38	2,8	0,4	3
DCGW 11T302FN	11,60	9,525	3,97	4,4	0,2	3
DCGW 11T304FN	11,60	9,525	3,97	4,4	0,4	3
DCGW 11T308FN	11,60	9,525	3,97	4,4	0,8	3
DCGX 070200FL	7,75	6,35	2,38	2,8	0,0	3
DCGX 070200FR	7,75	6,35	2,38	2,8	0,0	3
DCGX 070201FL	7,75	6,35	2,38	2,8	0,1	3
DCGX 070201FR	7,75	6,35	2,38	2,8	0,1	3
DCGX 070202FL	7,75	6,35	2,38	2,8	0,2	3
DCGX 070202FR	7,75	6,35	2,38	2,8	0,2	3
DCGX 11T300FL	11,60	9,525	3,97	4,4	0,0	3
DCGX 11T300FR	11,60	9,525	3,97	4,4	0,0	3
DCGX 11T301FL	11,60	9,525	3,97	4,4	0,1	3
DCGX 11T301FR	11,60	9,525	3,97	4,4	0,1	3
DCGX 11T302FL	11,60	9,525	3,97	4,4	0,2	3
DCGX 11T302FR	11,60	9,525	3,97	4,4	0,2	3
DCGX 11T304FL	11,60	9,525	3,97	4,4	0,4	3
DCGX 11T304FR	11,60	9,525	3,97	4,4	0,4	3

Dimensions in mm

Grade availability						
coated			uncoated			
AM5015	AM5025	AM5110	AK1010	AK1020	AK20	Designation
			X	X		DCGT 0702005FN-PS
	X		X	X		DCGT 070201FN-PS
	X		X	X		DCGT 070202FN-PS
	X		X	X		DCGT 070204FN-PS
			X	X		DCGT 11T3005FN-PS
	X		X	X		DCGT 11T301FN-PS
	X		X	X		DCGT 11T302FN-PS
	X		X	X		DCGT 11T304FN-PS
X						DCGT 070201EN-ASF
X	X					DCGT 070202EN-ASF
		X				DCGT 070202FN-ASF
X	X					DCGT 070204EN-ASF
		X				DCGT 070204FN-ASF
X						DCGT 11T301EN-ASF
X	X					DCGT 11T302EN-ASF
X	X					DCGT 11T304EN-ASF
		X				DCGT 11T304FN-ASF
X	X					DCGT 11T308EN-ASF
				X		DCGW 070202FN
				X		DCGW 070204FN
				X		DCGW 11T302FN
				X		DCGW 11T304FN
				X		DCGW 11T308FN
	X				X	DCGX 070200FL
	X				X	DCGX 070200FR
	X				X	DCGX 070201FL
	X				X	DCGX 070201FR
	X				X	DCGX 070202FL
	X				X	DCGX 070202FR
	X				X	DCGX 11T300FL
	X				X	DCGX 11T300FR
	X				X	DCGX 11T301FL
	X				X	DCGX 11T301FR
	X				X	DCGX 11T302FL
	X				X	DCGX 11T302FR
	X				X	DCGX 11T304FL
	X				X	DCGX 11T304FR

P	●		○				P
M	●	●	●				M
K	○		○	○	○	○	K
N			○	●	●	●	N
S	●	●	●				S
H	○		○				H

X Available grade
● Main application
○ 2nd application

3

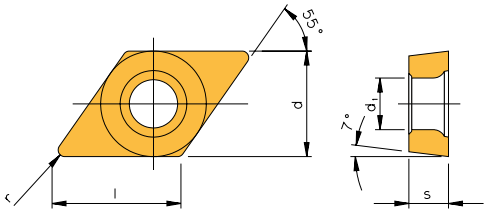

DC..

Designation	l	d	s	d_1	r	PG
DCMT 070202EN-AM	7,75	6,35	2,38	2,8	0,2	3
DCMT 070204EN-AM	7,75	6,35	2,38	2,8	0,4	3
DCMT 070208EN-AM	7,75	6,35	2,38	2,8	0,8	3
DCMT 11T302EN-AM	11,60	9,525	3,97	4,4	0,2	3
DCMT 11T304EN-AM	11,60	9,525	3,97	4,4	0,4	3
DCMT 11T308EN-AM	11,60	9,525	3,97	4,4	0,8	3
DCMT 070202EN-PM1	7,75	6,35	2,38	2,8	0,2	3
DCMT 070204EN-PM1	7,75	6,35	2,38	2,8	0,4	3
DCMT 11T302EN-PM1	11,60	9,525	3,97	4,4	0,2	3
DCMT 11T304EN-PM1	11,60	9,525	3,97	4,4	0,4	3
DCMT 11T308EN-PM1	11,60	9,525	3,97	4,4	0,8	3
DCMT 070202EN-PS2	7,75	6,35	2,38	2,8	0,2	3
DCMT 070204EN-PS2	7,75	6,35	2,38	2,8	0,4	3
DCMT 11T302EN-PS2	11,60	9,525	3,97	4,4	0,2	3
DCMT 11T304EN-PS2	11,60	9,525	3,97	4,4	0,4	3
DCMT 11T304EN-PMS	11,60	9,525	3,97	4,4	0,4	3
WIPER DCMX 11T304EN-WMS	11,60	9,525	3,97	4,4	0,4	3
DCXT 070202EN-AEC	7,75	6,35	2,38	2,8	0,2	3
DCXT 070204EN-AEC	7,75	6,35	2,38	2,8	0,4	3
DCXT 11T302EN-AEC	11,60	9,525	3,97	4,4	0,2	3
DCXT 11T304EN-AEC	11,60	9,525	3,97	4,4	0,4	3
DCXT 11T308EN-AEC	11,60	9,525	3,97	4,4	0,8	3

Application reference on WIPER geometries on pages 276-277

Dimensions in mm

Grade availability													
coated												uncoated	
AK2110	AM2030	AM2110	AM2130	AM5020	AM5110	AM5120	AM5130	AP2110	AP2310	AP2320	AP2335	AK10	Designation
			X			X			X	X	X		DCMT 070202EN-AM
			X			X			X	X	X		DCMT 070204EN-AM
			X			X			X	X	X		DCMT 070208EN-AM
			X			X			X	X	X		DCMT 11T302EN-AM
			X			X			X	X	X		DCMT 11T304EN-AM
			X			X			X	X	X		DCMT 11T308EN-AM
X			X		X	X		X		X			DCMT 070202EN-PM1
X			X		X	X		X		X			DCMT 070204EN-PM1
			X		X	X			X	X			DCMT 11T302EN-PM1
X		X	X		X	X			X	X			DCMT 11T304EN-PM1
X			X		X	X			X	X			DCMT 11T308EN-PM1
			X		X	X			X	X			DCMT 070202EN-PS2
			X		X	X			X	X			DCMT 070204EN-PS2
			X		X	X			X	X			DCMT 11T302EN-PS2
			X		X	X			X	X			DCMT 11T304EN-PS2
							X						DCMT 11T304EN-PMS
	X												DCMX 11T304EN-WMS
				X								X	DCXT 070202EN-AEC
				X								X	DCXT 070204EN-AEC
				X								X	DCXT 11T302EN-AEC
				X								X	DCXT 11T304EN-AEC
				X								X	DCXT 11T308EN-AEC
AK2110	AM2030	AM2110	AM2130	AM5020	AM5110	AM5120	AM5130	AP2110	AP2310	AP2320	AP2335	AK10	

	AK2110	AM2030	AM2110	AM2130	AM5020	AM5110	AM5120	AM5130	AP2110	AP2310	AP2320	AP2335	AK10	
P	○				○	○	○	○	●	●	●	●		P
M		●	●	●	●	●	●	●						M
K	●					○	○	○	○				○	K
N						○	○	○					●	N
S		○				●	●	●						S
H						○	○	○						H

X Available grade

● Main application

○ 2nd application

3

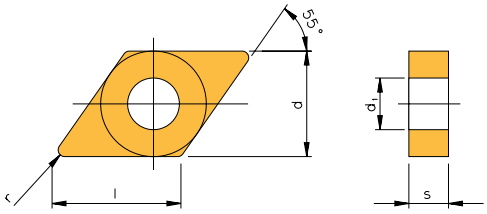

DN..

Designation	l	d	s	d_1	r	PG
DNGP 110402FN-EX	11,60	9,525	4,76	3,81	0,2	2
DNGP 110404FN-EX	11,60	9,525	4,76	3,81	0,4	2
DNGP 150602FN-EX	15,50	12,700	6,35	5,2	0,2	2
DNGP 150604FN-EX	15,50	12,700	6,35	5,2	0,4	2
DNGP 150608FN-EX	15,50	12,700	6,35	5,2	0,8	2
DNMG 110404EN-NM2	11,60	9,525	4,76	3,81	0,4	2
DNMG 110408EN-NM2	11,60	9,525	4,76	3,81	0,8	2
DNMG 150604EN-NM2	15,50	12,700	6,35	5,2	0,4	2
DNMG 150608EN-NM2	15,50	12,700	6,35	5,2	0,8	2
DNMG 150612EN-NM2	15,50	12,700	6,35	5,2	1,2	2
DNMG 150604EL-K	15,50	12,700	6,35	5,2	0,4	2
DNMG 150604ER-K	15,50	12,700	6,35	5,2	0,4	2
DNMG 150608EL-K	15,50	12,700	6,35	5,2	0,8	2
DNMG 150608ER-K	15,50	12,700	6,35	5,2	0,8	2
DNMG 150604EN-NMR	15,50	12,700	6,35	5,2	0,4	2
DNMG 150608EN-NMR	15,50	12,700	6,35	5,2	0,8	2
DNMG 150612EN-NMR	15,50	12,700	6,35	5,2	1,2	2
DNMG 150604EN-NS1	15,50	12,700	6,35	5,2	0,4	2
DNMG 150608EN-NS1	15,50	12,700	6,35	5,2	0,8	2
DNMG 150604EN-VA	15,50	12,700	6,35	5,2	0,4	2
DNMG 150608EN-VA	15,50	12,700	6,35	5,2	0,8	2
DNMG 150608EN-NMG1	15,50	12,700	6,35	5,2	0,8	2
DNMG 150612EN-NMG1	15,50	12,700	6,35	5,2	1,2	2
DNMP 150604ER	15,50	12,700	6,35	5,2	0,4	2
DNMP 150608ER	15,50	12,700	6,35	5,2	0,8	2

Dimensions in mm

Grade availability

	coated													uncoated		
	AK2310	AM2035	AM2110	AM2130	AM5025	AM5120	AP2110	AP2120	AP2135	AP2310	AP2320	AP2335	AM25C	AK1010	AK1020	Designation
					X											DNGP 110402FN-EX
					X										X	DNGP 110404FN-EX
					X										X	DNGP 150602FN-EX
					X										X	DNGP 150604FN-EX
					X										X	DNGP 150608FN-EX
				X							X					DNMG 110404EN-NM2
				X				X								DNMG 110408EN-NM2
				X							X					DNMG 150604EN-NM2
				X							X					DNMG 150608EN-NM2
				X				X								DNMG 150612EN-NM2
				X							X					DNMG 150604EL-K
				X							X					DNMG 150604ER-K
				X							X					DNMG 150608EL-K
				X							X					DNMG 150608ER-K
				X		X										DNMG 150604EN-NMR
				X		X										DNMG 150608EN-NMR
				X												DNMG 150612EN-NMR
			X				X	X								DNMG 150604EN-NS1
			X							X	X					DNMG 150608EN-NS1
		X												X		DNMG 150604EN-VA
		X														DNMG 150608EN-VA
	X			X				X				X				DNMG 150608EN-NMG1
	X			X				X	X							DNMG 150612EN-NMG1
													X			DNMP 150604ER
													X			DNMP 150608ER
	AK2310	AM2035	AM2110	AM2130	AM5025	AM5120	AP2110	AP2120	AP2135	AP2310	AP2320	AP2335	AM25C	AK1010	AK1020	

	AK2310	AM2035	AM2110	AM2130	AM5025	AM5120	AP2110	AP2120	AP2135	AP2310	AP2320	AP2335	AM25C	AK1010	AK1020	
P	○	○				○	●	●	●	●	●	●	●			P
M		●	●	●	●	●										M
K	●					○	○						○	○	○	K
N						○								●	●	N
S		●			●	●										S
H						○										H

X Available grade
● Main application
○ 2nd application

3

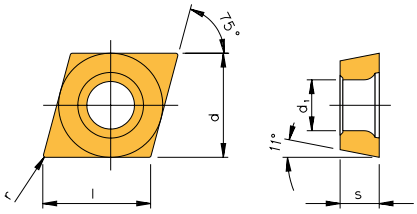

EP..

Designation	l	d	s	d_1	r	PG	Grade availability coated AM25C
EPMT 060202EN	6,50	6,350	2,38	2,8	0,2	3	X
EPMT 08M304EN	8,20	7,970	3,00	4,4	0,4	3	X

X Available grade
● Main application
○ 2nd application

P	●
M	
K	○
N	
S	
H	

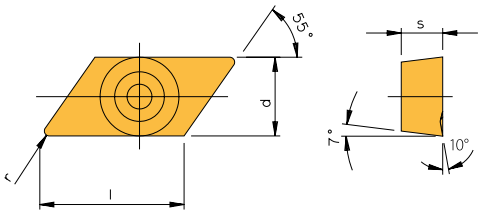

KC..

Designation	l	d	s	r	PG	Grade availability coated AM35C	uncoated AK10
KCGX 110301FL	11,60	6,350	3,18	0,1	17		X
KCGX 110301FR	11,60	6,350	3,18	0,1	17		X
KCGX 110302EL	11,60	6,350	3,18	0,2	17	X	
KCGX 110302ER	11,60	6,350	3,18	0,2	17	X	
KCGX 110302FL	11,60	6,350	3,18	0,2	17		X
KCGX 110302FR	11,60	6,350	3,18	0,2	17		X
KCGX 110304EL	11,60	6,350	3,18	0,4	17	X	
KCGX 110304ER	11,60	6,350	3,18	0,4	17	X	
KCGX 110304FL	11,60	6,350	3,18	0,4	17		X
KCGX 110304FR	11,60	6,350	3,18	0,4	17		X
KCGX 110308EL	11,60	6,350	3,18	0,8	17	X	
KCGX 110308ER	11,60	6,350	3,18	0,8	17	X	
KCGX 110308FL	11,60	6,350	3,18	0,8	17		X
KCGX 110308FR	11,60	6,350	3,18	0,8	17		X

X Available grade
● Main application
○ 2nd application

P	●	
M	○	
K		○
N		●
S		
H		

Dimensions in mm

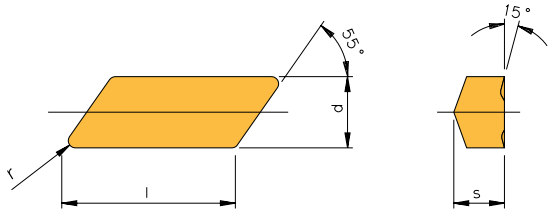

KN..

Designation	l	d	s	r	PG	AP2025	AM35C	AR27C	AR370
						Grade availability coated			
KNMX 190504ER	19,5	19,50	5,70	0,4	1		X		
KNMX 190508ER	19,5	19,50	5,70	0,8	1		X		
KNMX 190504EL-A	19,5	19,50	5,70	0,4	1		X		
KNMX 190504ER-A	19,5	19,50	5,70	0,4	1		X		
KNMX 190508EL-A	19,5	19,50	5,70	0,8	1		X		
KNMX 190508ER-A	19,5	19,50	5,70	0,8	1		X		
KNUX 160405EL-11	16,0	9,52	4,76	0,5	29		X	X	
KNUX 160405EL-N11	16,0	9,52	4,76	0,5	29	X			X
KNUX 160405ER-11	16,0	9,52	4,76	0,5	29		X	X	
KNUX 160405ER-N11	16,0	9,52	4,76	0,5	29	X			X
KNUX 160410EL-11	16,0	9,52	4,76	1,0	29		X		
KNUX 160410EL-N11	16,0	9,52	4,76	1,0	29	X			X
KNUX 160410ER-11	16,0	9,52	4,76	1,0	29		X		
KNUX 160410ER-N11	16,0	9,52	4,76	1,0	29	X			X
KNUX 160405ER-12	16,0	9,52	4,76	0,5	29		X		

N11 = sintered chip breaker

11 = ground chip breaker

X Available grade

● Main application

○ 2nd application

	AP2025	AM35C	AR27C	AR370
P	●	●	○	●
M	○	○		○
K	●		●	○
N				
S				
H				

3

Dimensions in mm

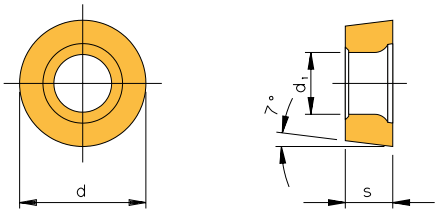

RC..

Designation	d	s	d_1	PG
RCMT 0602MOEN-AM	6,0	2,38	2,8	3
RCMT 0803MOEN-AM	8,0	3,18	3,4	3
RCMT 1003MOEN-AM	10,0	3,18	4,4	3
RCMT 1204MOEN-AM	12,0	4,76	4,4	3
RCMT 1606MOEN-AM	16,0	6,35	5,3	3

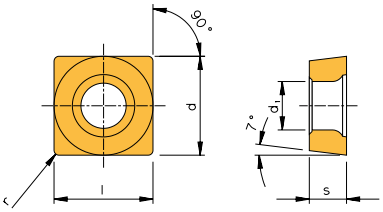

SC..

Designation	l	d	s	d_1	r	PG
SCMT 09T304EN-AM	9,525	9,525	3,97	4,4	0,4	3
SCMT 09T308EN-AM	9,525	9,525	3,97	4,4	0,8	3
SCMT 120404EN-AM	12,70	12,70	4,76	5,5	0,4	3
SCMT 120408EN-AM	12,70	12,70	4,76	5,5	0,8	3
SCMT 09T304EN-PM1	9,525	9,525	3,97	4,4	0,4	3
SCMT 120408EN-PMS	12,70	12,70	4,76	5,5	0,8	3
SCMT 120412EN-PMS	12,70	12,70	4,76	5,5	1,2	3
SCMX 120408EN	12,70	12,70	4,76	5,16	0,8	3
SCMX 190612EN	19,05	19,05	6,35	7,93	1,2	3
SCMX 120408EN-AM	12,70	12,70	4,76	5,16	0,8	3

Dimensions in mm

Grade availability

coated

AM2130	AM5110	AM5120	AP2310	AP2320	AP2335	Designation
X		X	X	X	X	RCMT 0602MOEN-AM
X		X	X	X	X	RCMT 0803MOEN-AM
X		X	X	X	X	RCMT 1003MOEN-AM
X		X	X	X	X	RCMT 1204MOEN-AM
X	X	X		X	X	RCMT 1606MOEN-AM

P		○	○	●	●	●	P
M	●	●	●				M
K		○	○				K
N		○	○				N
S		●	●				S
H		○	○				H

X Available grade
● Main application
○ 2nd application

3

Grade availability

coated

AM2035	AM2130	AM5120	AP2025	AP2035	AP2310	AP2320	AP2335	AM350	AM35C	AR27C	Designation
	X	X			X	X	X				SCMT 09T304EN-AM
	X	X			X	X	X				SCMT 09T308EN-AM
X			X	X							SCMT 120404EN-AM
	X	X			X	X	X				SCMT 120408EN-AM
	X					X					SCMT 09T304EN-PM1
				X							SCMT 120408EN-PMS
				X							SCMT 120412EN-PMS
									X	X	SCMX 120408EN
			X								SCMX 190612EN
								X	X		SCMX 120408EN-AM

AM2035	AM2130	AM5120	AP2025	AP2035	AP2310	AP2320	AP2335	AM350	AM35C	AR27C	
○		○	●	●	●	●	●	○	●	○	P
●	●	●	○	○				●	○		M
		○	●							●	K
		○									N
●		●									S
		○									H

X Available grade
● Main application
○ 2nd application

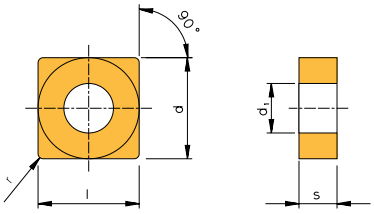

SN..

Designation	l	d	s	d_1	r	PG
SNMG 120408EN-NM2	12,70	12,70	4,76	5,16	0,8	2
SNMG 120408EN-NMG1	12,70	12,70	4,76	5,16	0,8	2
SNMG 120412EN-NMG1	12,70	12,70	4,76	5,16	1,2	2

3

Dimensions in mm

	Grade availability						
	coated						
	AK2110	AM2130	AM5110	AP2120	AP2135	AP2320	Designation
		X	X			X	SNMG 120408EN-NM2
	X	X		X	X		SNMG 120408EN-NMG1
	X	X		X	X		SNMG 120412EN-NMG1
P	○		○	●	●	●	P
M		●	●				M
K	●		○				K
N			○				N
S			●				S
H			○				H

X Available grade
● Main application
○ 2nd application

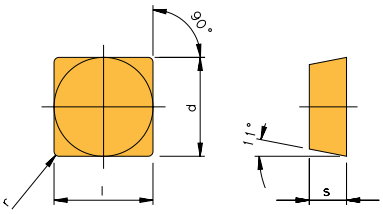

SP..

Designation	l	d	s	r	PG	Grade availability coated AP2025	coated AM35C	uncoated AK10
SPMR 120304EN	12,70	12,70	3,18	0,4	3	X		
SPMR 120308EL	12,70	12,70	3,18	0,8	1		X	
SPMR 120308EN	12,70	12,70	3,18	0,8	3		X	
SPMR 120308ER	12,70	12,70	3,18	0,8	1		X	
SPUN 120308EN	12,70	12,70	3,18	0,8	3			X

X Available grade
● Main application
○ 2nd application

	AP2025	AM35C	AK10
P	●	●	
M	○	○	
K	●		○
N			●
S			
H			

3

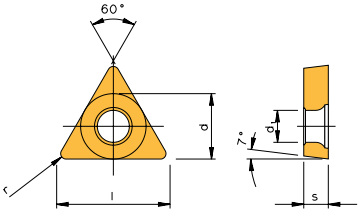

TC..

Designation	l	d	s	d_1	r	PG
TCGW 090204FN	9,60	5,560	2,38	2,5	0,4	3
TCGW 110202FN	11,00	6,350	2,38	2,8	0,2	3
TCMT 06T104EN-AM	6,35	3,970	1,98	2,34	0,4	3
TCMT 110204EN-AM	11,00	6,350	2,38	2,8	0,4	3
TCMT 110208EN-AM	11,00	6,350	2,38	2,8	0,8	3
TCMT 16T304EN-AM	16,50	9,525	3,97	4,4	0,4	3
TCMT 16T308EN-AM	16,50	9,525	3,97	4,4	0,8	3
TCMT 110202EN-PM1	11,00	6,350	2,38	2,8	0,2	3
TCMT 110204EN-PM1	11,00	6,350	2,38	2,8	0,4	3
TCMT 16T304EN-PM1	16,50	9,525	3,97	4,4	0,4	3
TCMT 16T308EN-PM1	16,50	9,525	3,97	4,4	0,8	3

Dimensions in mm

	Grade availability										
	coated									uncoated	
	AM2035	AM2130	AM5120	AP2035	AP2120	AP2310	AP2320	AP2335	AM350	AK1020	Designation
										X	TCGW 090204FN
										X	TCGW 110202FN
									X		TCMT 06T104EN-AM
		X	X			X	X	X			TCMT 110204EN-AM
	X			X							TCMT 110208EN-AM
		X	X			X	X	X			TCMT 16T304EN-AM
		X	X			X	X	X			TCMT 16T308EN-AM
		X			X						TCMT 110202EN-PM1
		X			X						TCMT 110204EN-PM1
		X					X				TCMT 16T304EN-PM1
		X					X				TCMT 16T308EN-PM1
P	○		○	●	●	●	●	●	○		P
M	●	●	●	○					●		M
K			○							○	K
N			○							●	N
S	●		●								S
H			○								H

X Available grade
● Main application
○ 2nd application

3

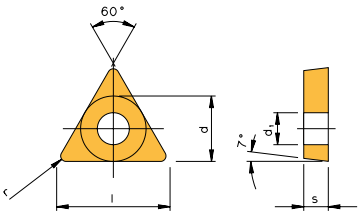

TCMX

Designation	l	d	s	d_1	r	PG	Grade availability coated AM35C	AR27C
TCMX 160404EN	1●	9,525	4,76	4,4	0,4	3	X	
TCMX 160408EN	1●	9,525	4,76	4,4	0,8	3	X	X
TCMX 160412EN	1●	9,525	4,76	4,4	1,2	3	X	
TCMX 220412EN	22,00	12,700	4,76	5,16	1,2	3	X	

X Available grade
● Main application
○ 2nd application

P	●	○
M	○	
K		●
N		
S		
H		

Dimensions in mm

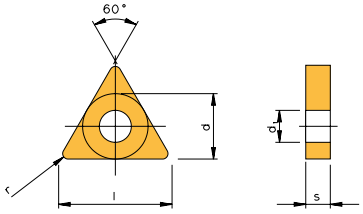

TN..

Designation	l	d	s	d_1	r	PG
TNMG 160404EL	16,50	9,525	4,76	3,81	0,4	2
TNMG 160404ER	16,50	9,525	4,76	3,81	0,4	2
TNMG 160408ER	16,50	9,525	4,76	3,81	0,8	2
TNMG 160404EN-NM2	16,50	9,525	4,76	3,81	0,4	2
TNMG 160408EN-NM2	16,50	9,525	4,76	3,81	0,8	2
TNMG 160412EN-NM2	16,50	9,525	4,76	3,81	1,2	2
TNMG 160408EN-NMG1	16,50	9,525	4,76	3,81	0,8	2
TNMG 160412EN-NMG1	16,50	9,525	4,76	3,81	1,2	2
TNMG 160404EN-NMR	16,50	9,525	4,76	3,81	0,4	2
TNMG 160408EN-NMR	16,50	9,525	4,76	3,81	0,8	2
TNMG 160412EN-NMR	16,50	9,525	4,76	3,81	1,2	2
TNMG 160404EN-NS1	16,50	9,525	4,76	3,81	0,4	2
TNMG 160408EN-NS1	16,50	9,525	4,76	3,81	0,8	2
TNMG 160404EN-NFT	16,50	9,525	4,76	3,81	0,4	2
TNMG 160408EN-NFT	16,50	9,525	4,76	3,81	0,8	2
TNMG 160404EN-NMT	16,50	9,525	4,76	3,81	0,4	2
TNMG 160408EN-NMT	16,50	9,525	4,76	3,81	0,8	2
TNMG 160408EN-NMT1	16,50	9,525	4,76	3,81	0,8	2
TNMG 160412EN-NMT1	16,50	9,525	4,76	3,81	1,2	2

Dimensions in mm

Grade availability

coated

AK2110	AM2110	AM2130	AM5110	AM5120	AM5130	AP2110	AP2120	AP2135	AP2320	AP2335	AM35C	Designation
											X	TNMG 160404EL
											X	TNMG 160404ER
											X	TNMG 160408ER
		X							X			TNMG 160404EN-NM2
		X							X			TNMG 160408EN-NM2
		X					X					TNMG 160412EN-NM2
X		X							X	X		TNMG 160408EN-NMG1
X		X					X	X				TNMG 160412EN-NMG1
		X		X								TNMG 160404EN-NMR
		X		X								TNMG 160408EN-NMR
		X										TNMG 160412EN-NMR
	X					X	X					TNMG 160404EN-NS1
	X					X	X					TNMG 160408EN-NS1
		X	X	X								TNMG 160404EN-NFT
		X	X	X								TNMG 160408EN-NFT
		X	X	X	X							TNMG 160404EN-NMT
		X	X	X	X							TNMG 160408EN-NMT
		X	X	X								TNMG 160408EN-NMT1
		X	X	X								TNMG 160412EN-NMT1
AK2110	AM2110	AM2130	AM5110	AM5120	AM5130	AP2110	AP2120	AP2135	AP2320	AP2335	AM35C	

	AK2110	AM2110	AM2130	AM5110	AM5120	AM5130	AP2110	AP2120	AP2135	AP2320	AP2335	AM35C	
P	○				○		●	●	●	●	●	●	P
M		●	●	●	●	●						○	M
K	●				○		○						K
N					○								N
S			○	●	●	●							S
H					○								H

X Available grade

● Main application

○ 2nd application

3

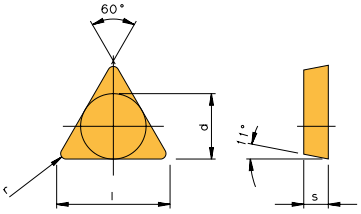

TP..

Designation	l	d	s	r	PG	Grade availability: coated AM35C	coated AR27C	uncoated AK10
TPGN 110308EN	11,00	6,350	3,18	0,8	3			X
TPMR 110304EN	11,00	6,350	3,18	0,4	3	X	X	
TPMR 160304EN	16,50	9,525	3,18	0,4	3	X	X	
TPMR 160308EN	16,50	9,525	3,18	0,8	3	X	X	
TPMR 110304EL	11,00	6,350	3,18	0,4	1	X		
TPMR 110304ER	11,00	6,350	3,18	0,4	1	X		
TPMR 160304EL	16,50	9,525	3,18	0,4	1	X		
TPMR 160304ER	16,50	9,525	3,18	0,4	1	X		
TPMR 160308EL	16,50	9,525	3,18	0,8	1	X		
TPMR 160308ER	16,50	9,525	3,18	0,8	1	X		
TPUN 160308EN	16,50	9,525	3,18	0,8	3			X

X Available grade
● Main application
○ 2nd application

	AM35C	AR27C	AK10
P	●	○	
M	○		
K		●	○
N			●
S			
H			

3

Dimensions in mm

ARNO® Mini-System
for Grooving, Turning and Chamfering

AMS – ARNO® MINI-SYSTEM

AMS – is a modular boring system starting at 2,5mm diameter with a maximum depth of 30mm

- Boring from Ø 2,5mm
- Grooving from 0,8mm width
- Full-radius grooving from R 0,5mm
- Back turning and chamfering
- Pre-grooving and chamfering
- Copy turning
- Thread turning starting at M4
- Face grooving from Ø 5mm

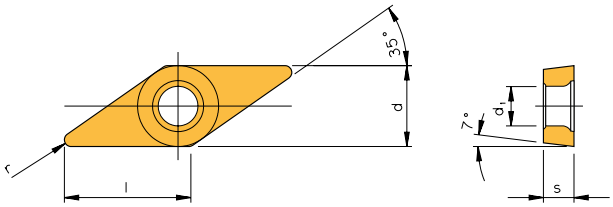

VC..

Designation	l	d	s	d_1	r	PG
VCGT 070202EN	6,92	3,970	2,38	2,2	0,2	3
VCGT 070204EN	6,92	3,970	2,38	2,2	0,4	3
VCGT 070202FR	6,92	3,970	2,38	2,2	0,2	3
VCGT 110304FN-ACB	11,10	6,350	3,18	2,8	0,4	22
VCGT 160404FN-ALU	16,50	9,525	4,76	4,4	0,4	22
VCGT 160408FN-ALU	16,50	9,525	4,76	4,4	0,8	22
VCGT 130304FN-AS	13,10	7,940	3,18	3,2	0,4	3
VCGT 070202EN-ASF	6,92	3,970	2,38	2,2	0,2	22
VCGT 070204EN-ASF	6,92	3,970	2,38	2,2	0,4	22
VCGT 070204FN-ASF	6,92	3,970	2,38	2,2	0,4	22
VCGT 1103005FN-ASF	11,10	6,350	3,18	2,8	0,05	22
VCGT 110301EN-ASF	11,10	6,350	3,18	2,8	0,1	22
VCGT 110301FN-ASF	11,10	6,350	3,18	2,8	0,1	22
VCGT 110302EN-ASF	11,10	6,350	3,18	2,8	0,2	22
VCGT 110302FN-ASF	11,10	6,350	3,18	2,8	0,2	22
VCGT 110304EN-ASF	11,10	6,350	3,18	2,8	0,4	22
VCGT 110304FN-ASF	11,10	6,350	3,18	2,8	0,4	22
VCGT 130302EN-ASF	13,10	7,940	3,18	3,2	0,2	22
VCGT 130304EN-ASF	13,10	7,940	3,18	3,2	0,4	22
VCGT 160402EN-ASF	16,50	9,525	4,76	4,4	0,2	22
VCGT 160404EN-ASF	16,50	9,525	4,76	4,4	0,4	22
VCGT 160408EN-ASF	16,50	9,525	4,76	4,4	0,8	22
VCGT 1103002FL-PF2	11,10	6,350	3,18	2,8	0,02	3
VCGT 1103002FR-PF2	11,10	6,350	3,18	2,8	0,02	3
VCGT 1103008FL-PF2	11,10	6,350	3,18	2,8	0,08	3
VCGT 1103008FR-PF2	11,10	6,350	3,18	2,8	0,08	3
VCGT 110301FL-PF2	11,10	6,350	3,18	2,8	0,1	3
VCGT 110301FR-PF2	11,10	6,350	3,18	2,8	0,1	3
VCGT 110302FL-PF2	11,10	6,350	3,18	2,8	0,2	3
VCGT 110302FR-PF2	11,10	6,350	3,18	2,8	0,2	3
VCGT 1103005FN-PS	11,10	6,350	3,18	2,8	0,05	3
VCGT 110301FN-PS	11,10	6,350	3,18	2,8	0,1	3
VCGT 110302FN-PS	11,10	6,350	3,18	2,8	0,2	3
VCGT 110304FN-PS	11,10	6,350	3,18	2,8	0,4	3
VCGT 1604005FN-PS	16,50	9,525	4,76	4,4	0,05	3
VCGT 160401FN-PS	16,50	9,525	4,76	4,4	0,1	3
VCGT 160402FN-PS	16,50	9,525	4,76	4,4	0,2	3
VCGT 160404FN-PS	16,50	9,525	4,76	4,4	0,4	3
VCGT 110302FN-Z	11,10	6,350	3,18	2,8	0,2	3

Dimensions in mm

Grade availability													
coated								uncoated					
AM5015	AM5025	AM5110	AM5120	AM5220	AP5210	AL10	AM15C	AK1010	AK1020	AK10	AK20	Designation
							X				X	VCGT 070202EN
							X					VCGT 070204EN
							X				X	VCGT 070202FR
					X							VCGT 110304FN-ACB
					X							VCGT 160404FN-ALU
					X							VCGT 160408FN-ALU
						X				X	X	VCGT 130304FN-AS
	X											VCGT 070202EN-ASF
	X											VCGT 070204EN-ASF
				X								VCGT 070204FN-ASF
			X									VCGT 1103005FN-ASF
X												VCGT 110301EN-ASF
			X									VCGT 110301FN-ASF
X	X											VCGT 110302EN-ASF
		X	X									VCGT 110302FN-ASF
X	X											VCGT 110304EN-ASF
		X	X									VCGT 110304FN-ASF
X												VCGT 130302EN-ASF
X												VCGT 130304EN-ASF
X	X											VCGT 160402EN-ASF
X	X											VCGT 160404EN-ASF
X												VCGT 160408EN-ASF
X								X	X			VCGT 1103002FL-PF2
X								X	X			VCGT 1103002FR-PF2
X								X	X			VCGT 1103008FL-PF2
X								X	X			VCGT 1103008FR-PF2
X								X	X			VCGT 110301FL-PF2
X								X	X			VCGT 110301FR-PF2
X								X	X			VCGT 110302FL-PF2
X								X	X			VCGT 110302FR-PF2
								X	X			VCGT 1103005FN-PS
	X							X	X			VCGT 110301FN-PS
	X							X	X			VCGT 110302FN-PS
	X							X	X			VCGT 110304FN-PS
								X	X			VCGT 1604005FN-PS
	X							X	X			VCGT 160401FN-PS
	X							X	X			VCGT 160402FN-PS
	X							X	X			VCGT 160404FN-PS
			X						X			VCGT 110302FN-Z

P	●		○	○	●	●	●	○					P
M	●	●	●	●	●	○	●	●					M
K	○		○	○	○	●	○	○	○	○	○	○	K
N			○	○					●	●	●	●	N
S	●	●	●	●	●	●	○						S
H	○		○	○	○		○						H

X Available grade

● Main application

○ 2nd application

Dimensions in mm

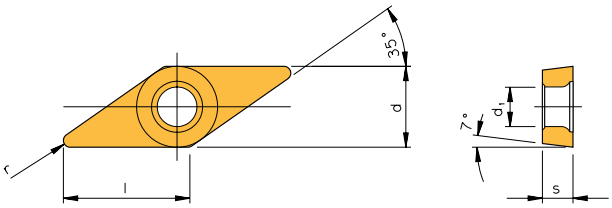

VC..

Designation	l	d	s	d_1	r	PG
VCGW 070201EN	6,92	3,970	2,38	2,2	0,1	3
VCGW 070202EN	6,92	3,970	2,38	2,2	0,2	3
VCGW 110301FN	11,10	6,350	3,18	2,8	0,1	3
VCGW 110302EN	11,10	6,350	3,18	2,8	0,2	3
VCGW 110302FN	11,10	6,350	3,18	2,8	0,2	3
VCGW 110304FN	11,10	6,350	3,18	2,8	0,4	3
VCGW 130302FN	13,10	7,940	3,18	3,2	0,2	3
VCGW 130304FN	13,10	7,940	3,18	3,2	0,4	3
VCGW 160402FN	16,50	9,525	4,76	4,4	0,2	3
VCGW 160404FN	16,50	9,525	4,76	4,4	0,4	3
VCGW 160408FN	16,50	9,525	4,76	4,4	0,8	3
VCGW 220530FN	22,10	12,700	5,56	5,5	3,0	6
VCGX 110300FL*	11,10	6,350	3,18	2,8	0,0	3
VCGX 110300FR*	11,10	6,350	3,18	2,8	0,0	3
VCGX 110301FL	11,10	6,350	3,18	2,8	0,1	3
VCGX 110301FR	11,10	6,350	3,18	2,8	0,1	3
VCGX 110302FL	11,10	6,350	3,18	2,8	0,2	3
VCGX 110302FR	11,10	6,350	3,18	2,8	0,2	3
VCGX 110304FL	11,10	6,350	3,18	2,8	0,4	3
VCGX 110304FR	11,10	6,350	3,18	2,8	0,4	3
VCGX 130301FR	13,10	7,940	3,18	3,2	0,1	3
VCGX 130302FL	13,10	7,940	3,18	3,2	0,2	3
VCGX 130302FR	13,10	7,940	3,18	3,2	0,2	3
VCGX 130304FL	13,10	7,940	3,18	3,2	0,4	3
VCGX 130304FR	13,10	7,940	3,18	3,2	0,4	3
VCMT 110302EN-AM	11,10	6,350	3,18	2,8	0,2	3
VCMT 110304EN-AM	11,10	6,350	3,18	2,8	0,4	3
VCMT 110308EN-AM	11,10	6,350	3,18	2,8	0,8	3
VCMT 160404EN-AM	16,50	9,525	4,76	4,4	0,4	3
VCMT 160408EN-AM	16,50	9,525	4,76	4,4	0,8	3
VCMT 160412EN-AM	16,50	9,525	4,76	4,4	1,2	3
VCMT 110302EN-PM1	11,10	6,350	3,18	2,8	0,2	3
VCMT 110304EN-PM1	11,10	6,350	3,18	2,8	0,4	3
VCMT 160404EN-PM1	16,50	9,525	4,76	4,4	0,4	3
VCMT 160408EN-PM1	16,50	9,525	4,76	4,4	0,8	3
VCMT 110302EN-PS2	11,10	6,350	3,18	2,8	0,2	3
VCMT 110304EN-PS2	11,10	6,350	3,18	2,8	0,4	3
VCMT 160404EN-PS2	16,50	9,525	4,76	4,4	0,4	3
VCXT 110302EN-AEC	11,10	6,350	3,18	2,8	0,2	3
VCXT 110304EN-AEC	11,10	6,350	3,18	2,8	0,4	3
VCXT 160404EN-AEC	16,50	9,525	4,76	4,4	0,4	3
VCXT 160408EN-AEC	16,50	9,525	4,76	4,4	0,8	3

* = Corner radius 0,03 mm

Dimensions in mm

Grade availability

	coated															uncoated			
	AK2110	AM2035	AM2110	AM2130	AM5020	AM5025	AM5110	AM5120	AP2025	AP2035	AP2110	AP2120	AP2310	AP2320	AP2335	AK1020	AK10	AK20	Designation
																		X	VCGW 070201EN
																		X	VCGW 070202EN
																X			VCGW 110301FN
																	X		VCGW 110302EN
																X			VCGW 110302FN
																X			VCGW 110304FN
																X			VCGW 130302FN
																X			VCGW 130304FN
																X			VCGW 160402FN
																X			VCGW 160404FN
																X			VCGW 160408FN
																		X	VCGW 220530FN
						X												X	VCGX 110300FL*
						X												X	VCGX 110300FR*
						X												X	VCGX 110301FL
						X												X	VCGX 110301FR
						X												X	VCGX 110302FL
						X												X	VCGX 110302FR
																		X	VCGX 110304FL
						X												X	VCGX 110304FR
						X												X	VCGX 130301FR
						X												X	VCGX 130302FL
						X												X	VCGX 130302FR
																		X	VCGX 130304FL
																		X	VCGX 130304FR
				X				X					X	X	X				VCMT 110302EN-AM
				X				X					X	X	X				VCMT 110304EN-AM
									X	X									VCMT 110308EN-AM
				X				X					X	X	X				VCMT 160404EN-AM
				X				X					X	X	X				VCMT 160408EN-AM
		X							X										VCMT 160412EN-AM
				X			X	X				X	X						VCMT 110302EN-PM1
	X			X			X	X					X	X					VCMT 110304EN-PM1
	X		X	X			X	X			X			X					VCMT 160404EN-PM1
	X		X	X			X	X			X			X					VCMT 160408EN-PM1
				X			X	X					X	X					VCMT 110302EN-PS2
				X			X	X					X	X					VCMT 110304EN-PS2
				X			X	X					X	X					VCMT 160404EN-PS2
					X														VCXT 110302EN-AEC
					X														VCXT 110304EN-AEC
					X														VCXT 160404EN-AEC
					X														VCXT 160408EN-AEC

	AK2110	AM2035	AM2110	AM2130	AM5020	AM5025	AM5110	AM5120	AP2025	AP2035	AP2110	AP2120	AP2310	AP2320	AP2335	AK1020	AK10	AK20	
P	○	○			○		○	○	●	●	●	●	●	●	●				P
M		●	●	●	●	●	●	●	○	○									M
K	●						○	○	●		○					○	○	○	K
N							○	○								●	●	●	N
S		●				●	●	●											S
H							○	○											H

X Available grade

● Main application

○ 2nd application

3

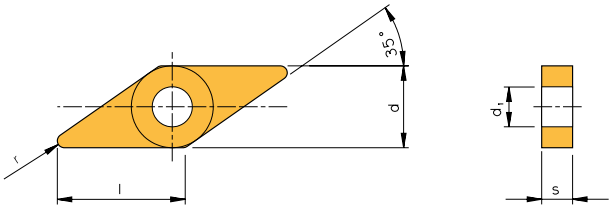

VN..

Designation	l	d	s	d_1	r	PG
VNGP 160402FN-EX	16,50	9,525	4,76	3,81	0,2	2
VNGP 160404FN-EX	16,50	9,525	4,76	3,81	0,4	2
VNMG 160404EN-NM2	16,50	9,525	4,76	3,81	0,4	2
VNMG 160404EN-NS1	16,50	9,525	4,76	3,81	0,4	2
VNMG 160408EN-NMR	16,50	9,525	4,76	3,81	0,8	2
VNMG 160408EN-NFT	16,50	9,525	4,76	3,81	0,4	2
VNMG 160408EN-NFT	16,50	9,525	4,76	3,81	0,8	2

3

Dimensions in mm

Grade availability									
coated								uncoated	
AM2110	AM2130	AM5025	AM5110	AM5120	AP2110	AP2120	AP2320	AK1020	Designation
		X							VNGP 160402FN-EX
		X						X	VNGP 160404FN-EX
	X						X		VNMG 160404EN-NM2
X					X	X			VNMG 160404EN-NS1
	X								VNMG 160408EN-NMR
	X		X	X					VNMG 160408EN-NFT
	X		X	X					VNMG 160408EN-NFT

P						●	●	●		P
M	●	●	●	●	●					M
K						○			○	K
N									●	N
S		○	●	●	●					S
H										H

X Available grade
● Main application
○ 2nd application

3

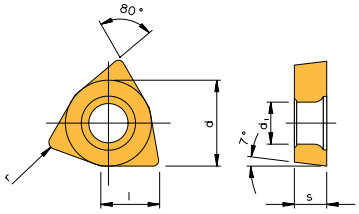

WC..

	Designation	l	d	s	d_1	r	PG
	WCGT 020102EN	2,70	3,970	1,59	2,2	0,2	3
	WCGT 020104EN	2,70	3,970	1,59	2,2	0,4	3
	WCGT 020101FL	2,70	3,970	1,59	2,2	0,1	3
	WCGT 020102FL	2,70	3,970	1,59	2,2	0,2	3
	WCMT 020102EN	2,70	3,970	1,59	2,2	0,2	3
	WCMT 020104EN	2,70	3,970	1,59	2,2	0,4	3
	WCMT 030202EN-AM	3,80	5,560	2,38	2,6	0,2	3
	WCMT 040202EN-AM	4,30	6,350	2,38	2,8	0,2	3
	WCMT 040204EN-AM	4,30	6,350	2,38	2,8	0,4	3
	WCMT 06T304EN-AM	6,50	9,525	3,97	4,4	0,4	3
	WCMT 06T308EN-AM	6,50	9,525	3,97	4,4	0,8	3
	WCMT 080404EN-AM	8,72	12,700	4,76	5,5	0,4	3
	WCMT 080408EN-AM	8,72	12,700	4,76	5,5	0,8	3

Dimensions in mm

					Grade availability					
					coated					
	AM2030	AM2130	AM5025	AM5120	AP2035	AP2310	AP2320	AP2335	AM15C	Designation
									X	WCGT 020102EN
									X	WCGT 020104EN
									X	WCGT 020101FL
									X	WCGT 020102FL
			X						X	WCMT 020102EN
			X							WCMT 020104EN
	X									WCMT 030202EN-AM
		X		X		X	X	X		WCMT 040202EN-AM
		X		X		X	X	X		WCMT 040204EN-AM
		X		X		X	X	X		WCMT 06T304EN-AM
		X		X		X	X	X		WCMT 06T308EN-AM
					X					WCMT 080404EN-AM
					X					WCMT 080408EN-AM
P				○	●	●	●	●	○	P
M	●	●	●	●	○				●	M
K				○					○	K
N				○						N
S	○		●	●						S
H				○						H

X Available grade

● Main application

○ 2nd application

3

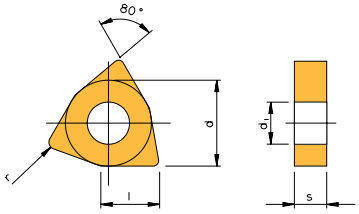

WN..

Designation	l	d	s	d_1	r	PG
WNGP 080404FN-EX	8,72	12,700	4,76	5,16	0,4	2
WNGP 080408FN-EX	8,72	12,700	4,76	5,16	0,8	2
WNMG 060404EN-NM2	6,50	9,525	4,76	3,81	0,4	2
WNMG 060408EN-NM2	6,50	9,525	4,76	3,81	0,8	2
WNMG 080404EN-NM2	8,72	12,700	4,76	5,16	0,4	2
WNMG 080408EN-NM2	8,72	12,700	4,76	5,16	0,8	2
WNMG 080412EN-NM2	8,72	12,700	4,76	5,16	1,2	2
WNMG 080404EN-NMR	8,72	12,700	4,76	5,16	0,4	2
WNMG 080408EN-NMR	8,72	12,700	4,76	5,16	0,8	2
WNMG 080412EN-NMR	8,72	12,700	4,76	5,16	1,2	2
WNMG 080408EN-NMG1	8,72	12,700	4,76	5,16	0,8	2
WNMG 080412EN-NMG1	8,72	12,700	4,76	5,16	1,2	2
WNMG 080404EN-NS1	8,72	12,700	4,76	5,16	0,4	2
WNMG 080408EN-NS1	8,72	12,700	4,76	5,16	0,8	2
WNMG 080404EN-VA	8,72	12,700	4,76	5,16	0,4	2
WNMG 080408EN-VA	8,72	12,700	4,76	5,16	0,8	2
WNMG 080404EN-NFT	8,72	12,700	4,76	5,16	0,4	2
WNMG 080408EN-NFT	8,72	12,700	4,76	5,16	0,8	2
WNMG 080404EN-NMT	8,72	12,700	4,76	5,16	0,4	2
WNMG 080408EN-NMT	8,72	12,700	4,76	5,16	0,8	2
WNMG 080408EN-NMT1	8,72	12,700	4,76	5,16	0,8	2
WNMG 080412EN-NMT1	8,72	12,700	4,76	5,16	1,2	2

Dimensions in mm

Grade availability

	coated												uncoated		
	AK2310	AM2110	AM2130	AM5025	AM5110	AM5120	AM5130	AP2110	AP2120	AP2135	AP2320	AP2335	AK1010	AK1020	Designation
				X										X	WNGP 080404FN-EX
				X										X	WNGP 080408FN-EX
			X								X				WNMG 060404EN-NM2
			X						X						WNMG 060408EN-NM2
			X								X				WNMG 080404EN-NM2
			X								X				WNMG 080408EN-NM2
			X						X						WNMG 080412EN-NM2
			X			X									WNMG 080404EN-NMR
			X			X									WNMG 080408EN-NMR
			X			X									WNMG 080412EN-NMR
	X		X								X	X			WNMG 080408EN-NMG1
	X		X						X	X					WNMG 080412EN-NMG1
		X						X	X						WNMG 080404EN-NS1
		X						X	X						WNMG 080408EN-NS1
													X		WNMG 080404EN-VA
													X		WNMG 080408EN-VA
			X		X	X									WNMG 080404EN-NFT
			X		X	X									WNMG 080408EN-NFT
			X		X	X	X								WNMG 080404EN-NMT
			X		X	X	X								WNMG 080408EN-NMT
			X		X	X									WNMG 080404EN-NMT1
			X		X	X									WNMG 080408EN-NMT1
	AK2310	AM2110	AM2130	AM5025	AM5110	AM5120	AM5130	AP2110	AP2120	AP2135	AP2320	AP2335	AK1010	AK1020	
P	○					○		●	●	●	●	●			P
M		●	●	●	●	●	●								M
K	●					○		○					○	○	K
N						○							●	●	N
S			○	●	●	●	●								S
H						○									H

X Available grade
● Main application
○ 2nd application

3

Coated

AM15C
CVD-Multi layer coating
Grade in combination with ALU-geometry for finishing alloyed and stainless steel as well as cast steel at high cutting speeds under stable machining conditions. Attention: Because of a small edge hone, this grade is not suitable for machining non-ferrous products.

AM5015 (PG22)
PVD-Multi layer coating
Wear resistant grade for machining steel, cast steel, stainless steel and high temperature alloys (super alloys).

AM5025 (PG22)
PVD-Multi layer coating
Ideal grade for finish to medium machining of stainless steel, temperature resistant steel and titanium (alloys). AM5025 has very good toughness and good wear resistance and can be used both at varied cutting depths and interupted cutting.

AM5110 (PG22)
PVD-Multi layer coating
Grade for finish machining of stainless steel, nickel –, titanium alloys and exotic materials. Also for abrasive and hard materials such as CoCrMo and chilled cast iron.

AM5120 (PG22)
PVD-Multi layer coating
The grade for roughing stainless steel and machining of exotic and heat resistant materials as well as titanium alloys.

AM5120+ (PG22)
PVD-Multi layer coating
Suitable for medium and roughing of tough exotic materials such as pure copper, molybdenum, nickel, pure iron, Inconel and stainless steel.

AM5220 (PG22)
PVD-Multi layer coating
High wear resistant grade for machining steel, cast steel, stainless steel and high temperature super alloys.

AP5210 (PG22)
PVD-Multi layer coating
Medium to light machining of exotic materials, titanium, titanium alloys, nickel alloys, machining of abrasive and hard materials such as CoCrMo or chilled cast iron. Finishing of steel and stainless steel.

AL10
PVD-Multi layer coating
Extremly wear resistant grade for machining steel materials, cast iron and stainless steel. Due to high hardness in coating, high wear resistance can be achieved. Specially suitable for high cutting speeds.

AL20
PVD-Multi layer coating
Wear resistant grade with good cutting edge stability for machining steel materials, cast iron and stainless steel. Due to the high hardness in coating, good wear resistance can be achieved.

AT10
PVD-Multi layer coating
Grade for medium machining of aluminium, aluminium alloys, cooper, brass, nonferrous materials and refractory metals under favorable cutting conditions. Higher cutting speeds can be used as grade PVD1.

AT20
PVD-Multi layer coating
Grade with higher toughness for medium machining of aluminium and alluminiu alloys, copper, brass, non-ferous materials and refractory metals under unfavorable cutting conditions. Higher cutting speeds can be used as grade PVD2.

PVD1
PVD-Multi layer coating
Submicron carbide grade with high wear resistance and resistance against crater wear. Light to medium cutting. Excellent for machining nonferrous products, e.g. Al and Al-alloys, copper, brass and refractory metals.

PVD2
PVD-Multi layer coating
Wear resistant grade with good cutting edge stability for machining nonferrous materiales, e.g. Al and Al-alloys, copper, brass and refractory metals under unfavorable machining conditions. Also suitable for finishing steel and stainless steel under favorable machining conditions.

AD2 (PG21)
PVD-Multi layer coating
Coated grade for medium machining Al and Al-alloys, copper brass and nonferrous metals under optimum machining conditions. Excellent toollife compared to grade AK20 can be achieved.

Uncoated

AK10

Carbide grade for machining all cast iron materials, Ti and Ti-alloys at medium chip cross sections under favorable machining conditions.

AK20

Carbide grade with higher toughness as AK10 for machining all cast iron materials at medium chip cross sections under unfavorable machining conditions.

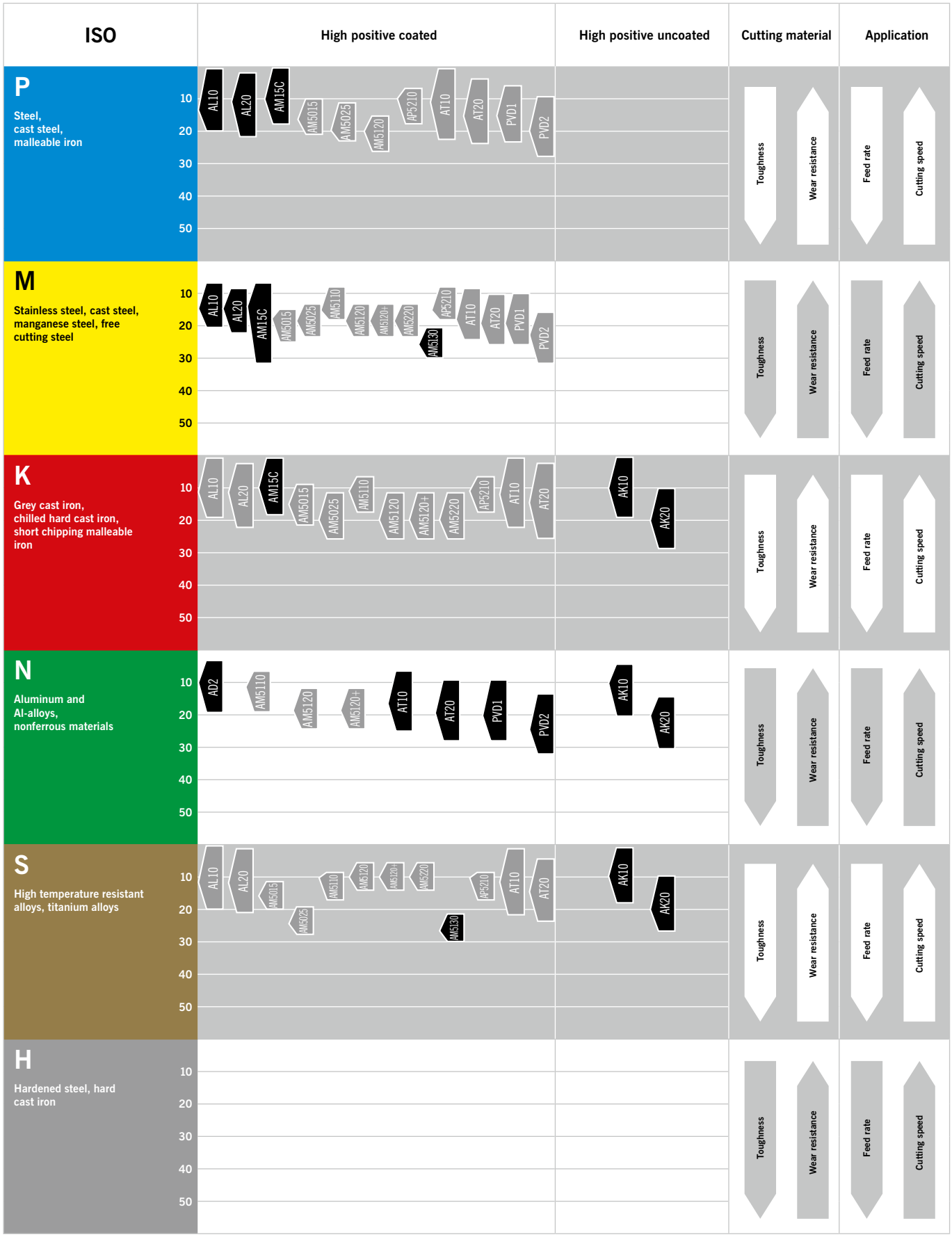

Main application area

AM5025 — Grade
Recommended application area

Secondary application area

AM5025 — Grade
Recommended application area

ARNO® SIM-Boring Bars
for internal machining.

ARNO® SIM-BORING BARS

The modular internal grooving system in 4 different sizes starting at a minimum bore of 7,8mm.

- Vibration reduced carbide shank with brazed steel head
- Internal coolant
- Shank with 2 clamping surfaces
- Highest stability through oval shaped shank
- Reach into bore up to 80mm
- Grooving depths up to 4,5mm
- Grooving widths from 0,8 – 4mm
- Inserts with harmonized PVD coating

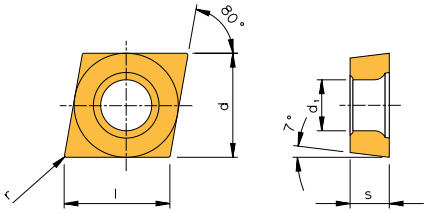

CC..

Designation	l	d	s	d_1	r	PG
CCGT 0602005FN-ALU	6,45	6,350	2,38	2,8	0,05	6
CCGT 060201EN-ALU	6,45	6,350	2,38	2,8	0,1	6
CCGT 060201FN-ALU	6,45	6,350	2,38	2,8	0,1	6
CCGT 060202EN-ALU	6,45	6,350	2,38	2,8	0,2	6
CCGT 060202FN-ALU	6,45	6,350	2,38	2,8	0,2	6
CCGT 060204EN-ALU	6,45	6,350	2,38	2,8	0,4	6
CCGT 060204FN-ALU	6,45	6,350	2,38	2,8	0,4	6
CCGT 09T301EN-ALU	9,67	9,525	3,97	4,4	0,1	6
CCGT 09T301FN-ALU	9,67	9,525	3,97	4,4	0,1	6
CCGT 09T302EN-ALU	9,67	9,525	3,97	4,4	0,2	6
CCGT 09T302FN-ALU	9,67	9,525	3,97	4,4	0,2	6
CCGT 09T304EN-ALU	9,67	9,525	3,97	4,4	0,4	6
CCGT 09T304FN-ALU	9,67	9,525	3,97	4,4	0,4	6
CCGT 09T308EN-ALU	9,67	9,525	3,97	4,4	0,8	6
CCGT 09T308FN-ALU	9,67	9,525	3,97	4,4	0,8	6
CCGT 120401EN-ALU	12,90	12,700	4,76	5,5	0,1	6
CCGT 120401FN-ALU	12,90	12,700	4,76	5,5	0,1	6
CCGT 120402EN-ALU	12,90	12,700	4,76	5,5	0,2	6
CCGT 120402FN-ALU	12,90	12,700	4,76	5,5	0,2	6
CCGT 120404EN-ALU	12,90	12,700	4,76	5,5	0,4	6
CCGT 120404FN-ALU	12,90	12,700	4,76	5,5	0,4	6
CCGT 120408EN-ALU	12,90	12,700	4,76	5,5	0,8	6
CCGT 120408FN-ALU	12,90	12,700	4,76	5,5	0,8	6
CCGT 060202FN-AWI	6,45	6,350	2,38	2,8	0,2	6
CCGT 060204FN-AWI	6,45	6,350	2,38	2,8	0,4	6
CCGT 060208FN-AWI	6,45	6,350	2,38	2,8	0,8	6
CCGT 09T302FN-AWI	9,67	9,525	3,97	4,4	0,2	6
CCGT 09T304FN-AWI	9,67	9,525	3,97	4,4	0,4	6
CCGT 09T308FN-AWI	9,67	9,525	3,97	4,4	0,8	6
CCGT 120404FN-AWI	12,90	12,700	4,76	5,5	0,4	6
CCGT 120408FN-AWI	12,90	12,700	4,76	5,5	0,4	6

Dimensions in mm

Grade availability

	coated									uncoated		
	AM15C	AP5210 (PG22)	AL10	AL20	AT10	AT20	PVD1	PVD2	AD2 (PG21)	AK10	AK20	Designation
			X	X	X	X	X	X	X	X	X	CCGT 0602005FN-ALU
	X											CCGT 060201EN-ALU
			X	X	X	X	X	X	X	X	X	CCGT 060201FN-ALU
	X											CCGT 060202EN-ALU
			X	X	X	X	X	X	X	X	X	CCGT 060202FN-ALU
	X											CCGT 060204EN-ALU
		X	X	X	X	X	X	X	X	X	X	CCGT 060204FN-ALU
	X											CCGT 09T301EN-ALU
			X	X	X	X	X	X	X	X	X	CCGT 09T301FN-ALU
	X											CCGT 09T302EN-ALU
			X	X	X	X	X	X	X	X	X	CCGT 09T302FN-ALU
	X											CCGT 09T304EN-ALU
		X	X	X	X	X	X	X	X	X	X	CCGT 09T304FN-ALU
	X											CCGT 09T308EN-ALU
			X	X	X	X	X	X	X	X	X	CCGT 09T308FN-ALU
	X											CCGT 120401EN-ALU
			X	X	X	X	X	X	X	X	X	CCGT 120401FN-ALU
	X											CCGT 120402EN-ALU
			X	X	X	X	X	X	X	X	X	CCGT 120402FN-ALU
	X											CCGT 120404EN-ALU
		X	X	X	X	X	X	X	X	X	X	CCGT 120404FN-ALU
	X											CCGT 120408EN-ALU
			X	X	X	X	X	X	X	X	X	CCGT 120408FN-ALU
			X		X					X		CCGT 060202FN-AWI
			X		X					X		CCGT 060204FN-AWI
			X		X					X		CCGT 060208FN-AWI
			X		X					X		CCGT 09T302FN-AWI
			X		X					X		CCGT 09T304FN-AWI
			X		X					X		CCGT 09T308FN-AWI
			X		X					X		CCGT 120404FN-AWI
			X		X					X		CCGT 120408FN-AWI

P	○	●	●	●	○	○	○	○				P
M	●	○	●	●	○	○	○	○				M
K	●	●	○	○	○	○				○	○	K
N					●	●	●	●	●	●	●	N
S		●	○	○								S
H			○	○								H

X Available grade
● Main application
○ 2nd application

3

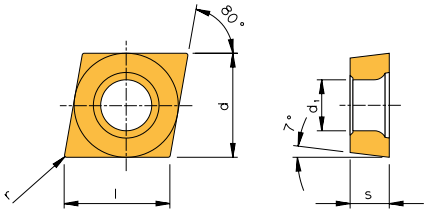

CC..

Designation	l	d	s	d_1	r	PG
CCGT 060204FN-ACB	6,45	6,350	2,38	2,8	0,4	6
CCGT 09T304EN-ACB	9,67	9,525	3,97	4,4	0,4	6
CCGT 09T304FN-ACB	9,67	9,525	3,97	4,4	0,4	6
CCGT 09T308EN-ACB	9,67	9,525	3,97	4,4	0,8	6
CCGT 09T308FN-ACB	9,67	9,525	3,97	4,4	0,8	6
CCGT 120404EN-ACB	12,90	12,700	4,76	5,5	0,4	6
CCGT 120404FN-ACB	12,90	12,700	4,76	5,5	0,4	6
CCGT 120408EN-ACB	12,90	12,700	4,76	5,5	0,8	6
CCGT 120408FN-ACB	12,90	12,700	4,76	5,5	0,8	6
CCGT 0602005FN-ASF	6,45	6,350	2,38	2,8	0,05	6
CCGT 060201EN-ASF	6,45	6,350	2,38	2,8	0,1	6
CCGT 060201FN-ASF	6,45	6,350	2,38	2,8	0,1	6
CCGT 060202EN-ASF	6,45	6,350	2,38	2,8	0,2	6
CCGT 060202FN-ASF	6,45	6,350	2,38	2,8	0,2	6
CCGT 060204EN-ASF	6,45	6,350	2,38	2,8	0,4	6
CCGT 060204FN-ASF	6,45	6,350	2,38	2,8	0,4	6
CCGT 09T3005FN-ASF	9,67	9,525	3,97	4,4	0,05	6
CCGT 09T301FN-ASF	9,67	9,525	3,97	4,4	0,1	6
CCGT 09T302EN-ASF	9,67	9,525	3,97	4,4	0,2	6
CCGT 09T302FN-ASF	9,67	9,525	3,97	4,4	0,2	6
CCGT 09T304EN-ASF	9,67	9,525	3,97	4,4	0,4	6
CCGT 09T304FN-ASF	9,67	9,525	3,97	4,4	0,4	6
CCGT 09T308FN-ASF	9,67	9,525	3,97	4,4	0,8	6
CCXT 060202EN-AEC	6,45	6,350	2,38	2,8	0,2	6
CCXT 060204EN-AEC	6,45	6,350	2,38	2,8	0,4	6
CCXT 09T302EN-AEC	9,67	9,525	3,97	4,4	0,2	6
CCXT 09T304EN-AEC	9,67	9,525	3,97	4,4	0,4	6
CCXT 09T308EN-AEC	9,67	9,525	3,97	4,4	0,8	6
CCXT 120404EN-AEC	12,90	12,700	4,76	5,5	0,4	6
CCXT 120408EN-AEC	12,90	12,700	4,76	5,5	0,8	6

Dimensions in mm

Grade availability

	coated												uncoated		
	AM5015 (PG22)	AM5025 (PG22)	AM5110 (PG22)	AM5120+ (PG22)	AP5210 (PG22)	AL10	AL20	AT10	AT20	PVD1	PVD2	AD2 (PG21)	AK10	AK20	Designation
					X	X	X	X	X	X	X	X	X	X	CCGT 060204FN-ACB
				X										X	CCGT 09T304EN-ACB
					X	X	X	X	X	X	X	X	X	X	CCGT 09T304FN-ACB
				X										X	CCGT 09T308EN-ACB
					X	X	X	X	X	X	X	X	X	X	CCGT 09T308FN-ACB
				X										X	CCGT 120404EN-ACB
						X	X	X	X	X	X	X	X	X	CCGT 120404FN-ACB
				X										X	CCGT 120408EN-ACB
						X	X	X	X	X	X	X	X	X	CCGT 120408FN-ACB
						X	X	X	X				X	X	CCGT 0602005FN-ASF
	X													X	CCGT 060201EN-ASF
						X	X	X	X				X	X	CCGT 060201FN-ASF
	X	X												X	CCGT 060202EN-ASF
			X			X	X	X	X		X		X	X	CCGT 060202FN-ASF
	X	X												X	CCGT 060204EN-ASF
			X			X	X	X	X		X		X	X	CCGT 060204FN-ASF
						X	X	X	X				X	X	CCGT 09T3005FN-ASF
						X	X	X	X				X	X	CCGT 09T301FN-ASF
	X	X												X	CCGT 09T302EN-ASF
						X	X	X	X				X	X	CCGT 09T302FN-ASF
	X	X												X	CCGT 09T304EN-ASF
			X			X	X	X	X				X	X	CCGT 09T304FN-ASF
			X			X	X	X	X				X	X	CCGT 09T308FN-ASF
													X		CCXT 060202EN-AEC
													X		CCXT 060204EN-AEC
													X		CCXT 09T302EN-AEC
													X		CCXT 09T304EN-AEC
													X		CCXT 09T308EN-AEC
													X		CCXT 120404EN-AEC
													X		CCXT 120408EN-AEC
P	●		○		●	●	●	○	○	○	○				P
M	●	●	●	○	○	●	●	○	○	○	○				M
K	○		○		●	○	○	○	○				○	○	K
N			○	●				●	●	●	●	●	●	●	N
S	●	●	●	●	●	○	○								S
H	○		○			○	○								H

X Available grade
● Main application
○ 2nd application

3

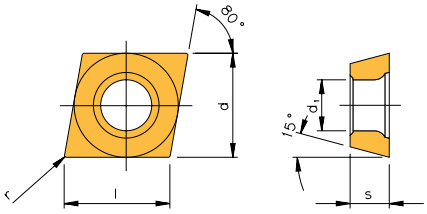

CD..

Designation	l	d	s	d_1	r	PG	Grade availability: coated AL20	coated AT20	uncoated AK20
CDGT 0401005FN-ALU	4,03	3,97	1,0	2,1	0,05	6	X	X	X
CDGT 040101FN-ALU	4,03	3,97	1,0	2,1	0,1	6	X	X	X
CDGT 040102FN-ALU	4,03	3,97	1,0	2,1	0,2	6	X	X	X
CDGT 040104FN-ALU	4,03	3,97	1,0	2,1	0,4	6	X	X	X

X Available grade
● Main application
○ 2nd application

	AL20	AT20	AK20
P	●	○	
M	●	○	
K	○	○	○
N		●	●
S	○		
H	○		

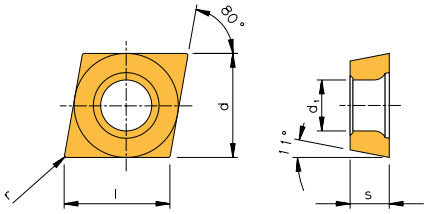

CP..

Designation	l	d	s	d_1	r	PG
CPGT 05T1005FN-ALU	5,60	5,560	1,98	2,5	0,05	6
CPGT 05T101EN-ALU	5,60	5,560	1,98	2,5	0,1	6
CPGT 05T101FN-ALU	5,60	5,560	1,98	2,5	0,1	6
CPGT 05T102EN-ALU	5,60	5,560	1,98	2,5	0,2	6
CPGT 05T102FN-ALU	5,60	5,560	1,98	2,5	0,2	6
CPGT 05T104EN-ALU	5,60	5,560	1,98	2,5	0,4	6
CPGT 05T104FN-ALU	5,60	5,560	1,98	2,5	0,4	6
CPGT 05T1005FN-ASF	5,60	5,560	1,98	2,5	0,05	6
CPGT 05T101FN-ASF	5,60	5,560	1,98	2,5	0,1	6
CPGT 05T102EN-ASF	5,60	5,560	1,98	2,5	0,2	6
CPGT 05T102FN-ASF	5,60	5,560	1,98	2,5	0,2	6
CPGT 05T104EN-ASF	5,60	5,560	1,98	2,5	0,4	6
CPGT 05T104FN-ASF	5,60	5,560	1,98	2,5	0,4	6

Dimensions in mm

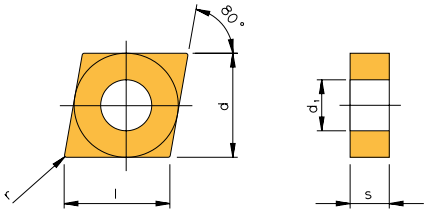

CN..

Designation	l	d	s	d_1	r	PG	Grade availability: coated AT20	coated PVD2	uncoated AK20
CNGM 160612FN-ALU	16,10	15,875	6,35	6,35	1,2	6	X	X	X
CNGM 190612FN-ALU	19,30	19,050	6,35	7,93	1,2	6	X	X	X

X Available grade
● Main application
○ 2nd application

	AT20	PVD2	AK20
P	○	○	
M	○	○	
K	○		○
N	●	●	●
S			
H			

3

Grade availability: coated AM15C	AM5025 (PG22)	AL10	AL20	AT10	AT20	PVD1	PVD2	AD2 (PG21)	uncoated AK10	AK20	Designation
		X	X	X	X	X	X	X	X	X	CPGT 05T1005FN-ALU
X											CPGT 05T101EN-ALU
		X	X	X	X	X	X	X	X	X	CPGT 05T101FN-ALU
X											CPGT 05T102EN-ALU
		X	X	X	X	X	X	X	X	X	CPGT 05T102FN-ALU
X											CPGT 05T104EN-ALU
		X	X	X	X	X	X	X	X	X	CPGT 05T104FN-ALU
		X	X	X	X				X	X	CPGT 05T1005FN-ASF
		X	X	X	X				X	X	CPGT 05T101FN-ASF
	X									X	CPGT 05T102EN-ASF
		X	X	X	X				X	X	CPGT 05T102FN-ASF
	X									X	CPGT 05T104EN-ASF
		X	X	X	X				X	X	CPGT 05T104FN-ASF

	AM15C	AM5025 (PG22)	AL10	AL20	AT10	AT20	PVD1	PVD2	AD2 (PG21)	AK10	AK20	
P	○		●	●	○	○	○	○				P
M	●	●	●	●	○	○	○	○				M
K	●		○	○	○	○				○	○	K
N					●	●	●	●	●	●	●	N
S		●	○	○								S
H			○	○								H

X Available grade
● Main application
○ 2nd application

Dimensions in mm

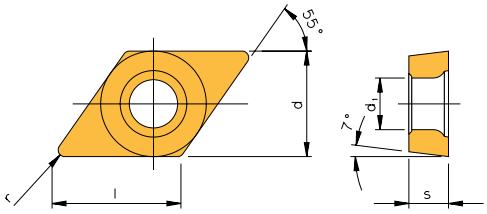

DC..

Designation	l	d	s	d_1	r	PG
DCGT 0702005FN-ALU	7,75	6,350	2,38	2,8	0,05	6
DCGT 070201EN-ALU	7,75	6,350	2,38	2,8	0,1	6
DCGT 070201FN-ALU	7,75	6,350	2,38	2,8	0,1	6
DCGT 070202EN-ALU	7,75	6,350	2,38	2,8	0,2	6
DCGT 070202FN-ALU	7,75	6,350	2,38	2,8	0,2	6
DCGT 070204EN-ALU	7,75	6,350	2,38	2,8	0,4	6
DCGT 070204FN-ALU	7,75	6,350	2,38	2,8	0,4	6
DCGT 11T3005FN-ALU	11,60	9,525	3,97	4,4	0,05	6
DCGT 11T301EN-ALU	11,60	9,525	3,97	4,4	0,1	6
DCGT 11T301FN-ALU	11,60	9,525	3,97	4,4	0,1	6
DCGT 11T302EN-ALU	11,60	9,525	3,97	4,4	0,2	6
DCGT 11T302FN-ALU	11,60	9,525	3,97	4,4	0,2	6
DCGT 11T304EN-ALU	11,60	9,525	3,97	4,4	0,4	6
DCGT 11T304FN-ALU	11,60	9,525	3,97	4,4	0,4	6
DCGT 11T308EN-ALU	11,60	9,525	3,97	4,4	0,8	6
DCGT 11T308FN-ALU	11,60	9,525	3,97	4,4	0,8	6
DCGT 11T312FN-ALU	11,60	9,525	3,97	4,4	1,2	6
DCGT 070202FN-AWI	7,75	6,350	2,38	2,8	0,2	6
DCGT 070204FN-AWI	7,75	6,350	2,38	2,8	0,4	6
DCGT 070208FN-AWI	7,75	6,350	2,38	2,8	0,8	6
DCGT 11T302FN-AWI	11,60	9,525	3,97	4,4	0,2	6
DCGT 11T304FN-AWI	11,60	9,525	3,97	4,4	0,4	6
DCGT 11T308FN-AWI	11,60	9,525	3,97	4,4	0,8	6
DCGT 070204FN-ACB	7,75	6,350	2,38	2,8	0,4	6
DCGT 11T304EN-ACB	11,60	9,525	3,97	4,4	0,4	6
DCGT 11T304FN-ACB	11,60	9,525	3,97	4,4	0,4	6
DCGT 11T308EN-ACB	11,60	9,525	3,97	4,4	0,8	6
DCGT 11T308FN-ACB	11,60	9,525	3,97	4,4	0,8	6
DCGT 0702005FN-ASF	7,75	6,350	2,38	2,8	0,05	6
DCGT 070201EN-ASF	7,75	6,350	2,38	2,8	0,1	6
DCGT 070201FN-ASF	7,75	6,350	2,38	2,8	0,1	6
DCGT 070202EN-ASF	7,75	6,350	2,38	2,8	0,2	6
DCGT 070202FN-ASF	7,75	6,350	2,38	2,8	0,2	6
DCGT 070204EN-ASF	7,75	6,350	2,38	2,8	0,4	6
DCGT 070204FN-ASF	7,75	6,350	2,38	2,8	0,4	6
DCGT 11T3005FN-ASF	11,60	9,525	3,97	4,4	0,05	6
DCGT 11T301EN-ASF	11,60	9,525	3,97	4,4	0,1	6
DCGT 11T301FN-ASF	11,60	9,525	3,97	4,4	0,1	6
DCGT 11T302EN-ASF	11,60	9,525	3,97	4,4	0,2	6
DCGT 11T302FN-ASF	11,60	9,525	3,97	4,4	0,2	6
DCGT 11T304EN-ASF	11,60	9,525	3,97	4,4	0,4	6
DCGT 11T304FN-ASF	11,60	9,525	3,97	4,4	0,4	6
DCGT 11T308EN-ASF	11,60	9,525	3,97	4,4	0,8	6
DCGT 11T308FN-ASF	11,60	9,525	3,97	4,4	0,8	6
DCXT 070202EN-AEC	7,75	6,350	2,38	2,8	0,2	6
DCXT 070204EN-AEC	7,75	6,350	2,38	2,8	0,4	6
DCXT 11T302EN-AEC	11,60	9,525	3,97	4,4	0,2	6
DCXT 11T304EN-AEC	11,60	9,525	3,97	4,4	0,4	6
DCXT 11T308EN-AEC	11,60	9,525	3,97	4,4	0,8	6

Dimensions in mm

Grade availability

	coated													uncoated		
	AM15C	AM5015 (PG22)	AM5025 (PG22)	AM5110 (PG22)	AM5120+ (PG22)	AP5210 (PG22)	AL10	AL20	AT10	AT20	PVD1	PVD2	AD2 (PG21)	AK10	AK20	Designation
							X	X	X	X	X	X	X	X	X	DCGT 0702005FN-ALU
	X															DCGT 070201EN-ALU
							X	X	X	X	X	X	X	X	X	DCGT 070201FN-ALU
	X															DCGT 070202EN-ALU
							X	X	X	X	X	X	X	X	X	DCGT 070202FN-ALU
	X															DCGT 070204EN-ALU
						X	X	X	X	X	X	X	X	X	X	DCGT 070204FN-ALU
														X	X	DCGT 11T3005FN-ALU
	X															DCGT 11T301EN-ALU
							X	X	X	X	X	X	X	X	X	DCGT 11T301FN-ALU
	X															DCGT 11T302EN-ALU
							X	X	X	X	X	X	X	X	X	DCGT 11T302FN-ALU
	X															DCGT 11T304EN-ALU
						X	X	X	X	X	X	X	X	X	X	DCGT 11T304FN-ALU
	X															DCGT 11T308EN-ALU
							X	X	X	X	X	X	X	X	X	DCGT 11T308FN-ALU
							X	X	X	X	X	X		X	X	DCGT 11T312FN-ALU
							X		X					X		DCGT 070202FN-AWI
							X		X					X		DCGT 070204FN-AWI
							X		X					X		DCGT 070208FN-AWI
							X		X					X		DCGT 11T302FN-AWI
							X		X					X		DCGT 11T304FN-AWI
		X					X		X					X		DCGT 11T308FN-AWI
						X	X	X	X	X	X	X	X	X	X	DCGT 070204FN-ACB
					X										X	DCGT 11T304EN-ACB
						X	X	X	X	X	X	X	X	X	X	DCGT 11T304FN-ACB
					X										X	DCGT 11T308EN-ACB
						X	X	X	X	X	X	X	X	X	X	DCGT 11T308FN-ACB
							X	X	X	X				X	X	DCGT 0702005FN-ASF
		X													X	DCGT 070201EN-ASF
							X	X	X	X				X	X	DCGT 070201FN-ASF
		X	X												X	DCGT 070202EN-ASF
				X			X	X	X	X		X		X	X	DCGT 070202FN-ASF
		X	X												X	DCGT 070204EN-ASF
				X			X	X	X	X		X		X	X	DCGT 070204FN-ASF
							X	X	X	X				X	X	DCGT 11T3005FN-ASF
		X													X	DCGT 11T301EN-ASF
							X	X	X	X				X	X	DCGT 11T301FN-ASF
		X	X												X	DCGT 11T302EN-ASF
							X	X	X	X		X		X	X	DCGT 11T302FN-ASF
		X	X												X	DCGT 11T304EN-ASF
				X			X	X	X	X		X		X	X	DCGT 11T304FN-ASF
		X	X												X	DCGT 11T308EN-ASF
				X			X	X	X	X				X	X	DCGT 11T308FN-ASF
														X		DCXT 070202EN-AEC
														X		DCXT 070204EN-AEC
														X		DCXT 11T302EN-AEC
														X		DCXT 11T304EN-AEC
														X		DCXT 11T308EN-AEC

	AM15C	AM5015 (PG22)	AM5025 (PG22)	AM5110 (PG22)	AM5120+ (PG22)	AP5210 (PG22)	AL10	AL20	AT10	AT20	PVD1	PVD2	AD2 (PG21)	AK10	AK20	
P	○	●		○		●	●	●	○	○	○	○				P
M	●	●	●	●	○	○	●	●	○	○	○	○				M
K	●	○		○		●	○	○	○	○				○	○	K
N				○	●				●	●	●	●	●	●	●	N
S		●	●	●	●	●	○	○								S
H		○		○			○	○								H

X Available grade
● Main application
○ 2nd application

3

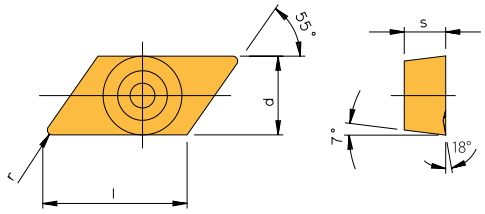

KC..

Designation	l	d	s	r	PG	Grade availability uncoated AK10
KCGX 110302FL-18	11,60	6,350	3,18	0,2	17	X
KCGX 110302FR-18	11,60	6,350	3,18	0,2	17	X
KCGX 110304FL-18	11,60	6,350	3,18	0,4	17	X
KCGX 110304FR-18	11,60	6,350	3,18	0,4	17	X
KCGX 110308FL-18	11,60	6,350	3,18	0,8	17	X
KCGX 110308FR-18	11,60	6,350	3,18	0,8	17	X

X Available grade
● Main application
○ 2nd application

P	
M	
K	○
N	●
S	
H	

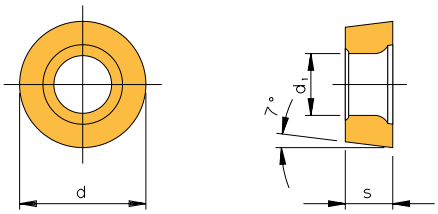

RC..

Designation	d	s	d_1	PG
RCGT 0602MOEN-ALU	6,0	2,38	2,8	6
RCGT 0602MOFN-ALU	6,0	2,38	2,8	6
RCGT 0803MOEN-ALU	8,0	3,18	3,4	6
RCGT 0803MOFN-ALU	8,0	3,18	3,4	6
RCGT 1003MOEN-ALU	10,0	3,18	4,4	6
RCGT 1003MOFN-ALU	10,0	3,18	4,4	6
RCGT 10T3MOEN-ALU	10,0	3,97	4,4	6
RCGT 10T3MOFN-ALU	10,0	3,97	4,4	6
RCGT 1204MOEN-ALU	12,0	4,76	4,4	6
RCGT 1204MOFN-ALU	12,0	4,76	4,4	6
RCGT 0602MOFN-ACB	6,0	2,38	2,8	6
RCGT 0803MOFN-ACB	8,0	3,18	3,4	6
RCGT 1003MOFN-ACB	10,0	3,18	4,4	6
RCGT 10T3MOFN-ACB	10,0	3,97	4,4	6
RCGT 1204MOFN-ACB	12,0	4,76	4,4	6
RCXT 0803MOFN-AEC	8,0	3,18	3,4	6

Dimensions in mm

Grade availability

	coated									uncoated		
	AM15C	AP5210 (PG22)	AL10	AL20	AT10	AT20	PVD1	PVD2	AD2 (PG21)	AK10	AK20	Designation
	X											RCGT 0602MOEN-ALU
			X	X	X	X	X	X	X	X	X	RCGT 0602MOFN-ALU
	X											RCGT 0803MOEN-ALU
			X	X	X	X	X	X	X	X	X	RCGT 0803MOFN-ALU
	X											RCGT 1003MOEN-ALU
			X	X	X	X	X	X	X	X	X	RCGT 1003MOFN-ALU
	X	X								X		RCGT 10T3MOEN-ALU
			X	X	X	X	X	X	X	X	X	RCGT 10T3MOFN-ALU
	X											RCGT 1204MOEN-ALU
			X	X	X	X	X	X	X	X	X	RCGT 1204MOFN-ALU
			X	X	X	X	X	X	X	X	X	RCGT 0602MOFN-ACB
			X	X	X	X	X	X	X	X	X	RCGT 0803MOFN-ACB
			X	X	X	X	X	X	X	X	X	RCGT 1003MOFN-ACB
			X	X	X	X	X	X	X	X	X	RCGT 10T3MOFN-ACB
			X	X	X	X	X	X	X	X	X	RCGT 1204MOFN-ACB
										X	X	RCXT 0803MOFN-AEC
P	○	●	●	●	○	○	○	○				P
M	●	○	●	●	○	○	○	○				M
K	●	●	○	○	○	○				○	○	K
N					●	●	●	●	●	●	●	N
S		●	○	○								S
H			○	○								H

X Available grade
● Main application
○ 2nd application

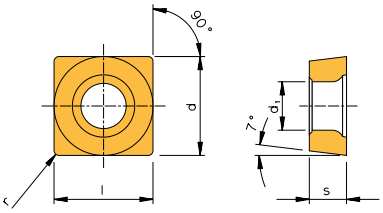

SC..

Designation	l	d	s	d_1	r	PG
SCGT 09T304EN-ALU	9,525	9,525	3,97	4,4	0,4	**6**
SCGT 09T304FN-ALU	9,525	9,525	3,97	4,4	0,4	**6**
SCGT 09T308EN-ALU	9,525	9,525	3,97	4,4	0,8	**6**
SCGT 09T308FN-ALU	9,525	9,525	3,97	4,4	0,8	**6**
SCGT 120404EN-ALU	12,700	12,700	4,76	5,5	0,4	**6**
SCGT 120404FN-ALU	12,700	12,700	4,76	5,5	0,4	**6**
SCGT 120408EN-ALU	12,700	12,700	4,76	5,5	0,8	**6**
SCGT 120408FN-ALU	12,700	12,700	4,76	5,5	0,8	**6**
SCGT 120412EN-ALU	12,700	12,700	4,76	5,5	1,2	**6**
SCGT 120412FN-ALU	12,700	12,700	4,76	5,5	1,2	**6**
SCGT 120416EN-ALU	12,700	12,700	4,76	5,5	1,6	**6**
SCGT 120416FN-ALU	12,700	12,700	4,76	5,5	1,6	**6**
SCGT 120404FN-ACB	12,700	12,700	4,76	5,5	0,4	**6**
SCXT 120408FN-AEC	12,700	12,700	4,76	5,5	0,8	**6**

3

Dimensions in mm

Grade availability

	coated								uncoated		
	AM15C	AL10	AL20	AT10	AT20	PVD1	PVD2	AD2 (PG21)	AK10	AK20	Designation
	X										SCGT 09T304EN-ALU
		X	X	X	X	X	X	X	X	X	SCGT 09T304FN-ALU
	X										SCGT 09T308EN-ALU
		X	X	X	X	X	X	X	X	X	SCGT 09T308FN-ALU
	X										SCGT 120404EN-ALU
		X	X	X	X	X	X	X	X	X	SCGT 120404FN-ALU
	X										SCGT 120408EN-ALU
		X	X	X	X	X	X	X	X	X	SCGT 120408FN-ALU
	X										SCGT 120412EN-ALU
		X	X	X	X	X	X	X	X	X	SCGT 120412FN-ALU
	X										SCGT 120416EN-ALU
		X	X	X	X	X	X	X	X	X	SCGT 120416FN-ALU
					X					X	SCGT 120404FN-ACB
									X		SCXT 120408FN-AEC
P	○	●	●	○	○	○	○				P
M	●	●	●	○	○	○	○				M
K	●	○	○	○	○				○	○	K
N				●	●	●	●	●	●	●	N
S		○	○								S
H		○	○								H

X Available grade
● Main application
○ 2nd application

3

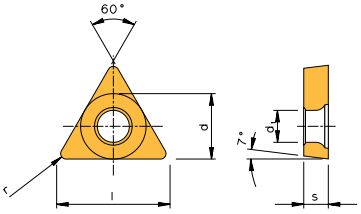

TC..

Designation	l	d	s	d_1	r	PG
TCGT 06T101FN-ALU	6,90	3,970	1,98	2,3	0,1	6
TCGT 06T102EN-ALU	6,90	3,970	1,98	2,3	0,2	6
TCGT 06T102FN-ALU	6,90	3,970	1,98	2,3	0,2	6
TCGT 090202EN-ALU	9,60	5,560	2,38	2,5	0,2	6
TCGT 090202FN-ALU	9,60	5,560	2,38	2,5	0,2	6
TCGT 090204EN-ALU	9,60	5,560	2,38	2,5	0,4	6
TCGT 090204FN-ALU	9,60	5,560	2,38	2,5	0,4	6
TCGT 110201EN-ALU	11,00	6,350	2,38	2,8	0,1	6
TCGT 110201FN-ALU	11,00	6,350	2,38	2,8	0,1	6
TCGT 110202EN-ALU	11,00	6,350	2,38	2,8	0,2	6
TCGT 110202FN-ALU	11,00	6,350	2,38	2,8	0,2	6
TCGT 110204EN-ALU	11,00	6,350	2,38	2,8	0,4	6
TCGT 110204FN-ALU	11,00	6,350	2,38	2,8	0,4	6
TCGT 16T301EN-ALU	16,50	9,525	3,97	4,4	0,1	6
TCGT 16T301FN-ALU	16,50	9,525	3,97	4,4	0,1	6
TCGT 16T302EN-ALU	16,50	9,525	3,97	4,4	0,2	6
TCGT 16T302FN-ALU	16,50	9,525	3,97	4,4	0,2	6
TCGT 16T304EN-ALU	16,50	9,525	3,97	4,4	0,4	6
TCGT 16T304FN-ALU	16,50	9,525	3,97	4,4	0,4	6
TCGT 16T308EN-ALU	16,50	9,525	3,97	4,4	0,8	6
TCGT 16T308FN-ALU	16,50	9,525	3,97	4,4	0,8	6
TCGT 16T312EN-ALU	16,50	9,525	3,97	4,4	1,2	6
TCGT 16T312FN-ALU	16,50	9,525	3,97	4,4	1,2	6
TCGT 16T316EN-ALU	16,50	9,525	3,97	4,4	1,6	6
TCGT 16T316FN-ALU	16,50	9,525	3,97	4,4	1,6	6
TCGT 110204FN-ACB	11,00	6,350	2,38	2,8	0,4	6
TCGT 16T304FN-ACB	16,50	9,525	3,97	4,4	0,4	6
TCGT 16T308FN-ACB	16,50	9,525	3,97	4,4	0,8	6
TCGT 06T102FN-ASF	6,90	3,970	1,98	2,3	0,2	6
TCGT 1102005FN-ASF	11,00	6,350	2,38	2,8	0,05	6
TCGT 110201FN-ASF	11,00	6,350	2,38	2,8	0,1	6
TCGT 110202FN-ASF	11,00	6,350	2,38	2,8	0,2	6
TCGT 110204FN-ASF	11,00	6,350	2,38	2,8	0,4	6
TCGT 16T301FN-ASF	16,50	9,525	3,97	4,4	0,1	6
TCGT 16T302FN-ASF	16,50	9,525	3,97	4,4	0,2	6
TCGT 16T304FN-ASF	16,50	9,525	3,97	4,4	0,4	6
TCXT 16T304FN-AEC	16,50	9,525	3,97	4,4	0,4	6

Dimensions in mm

	Grade availability										
	coated								uncoated		
	AM15C	AL10	AL20	AT10	AT20	PVD1	PVD2	AD2 (PG21)	AK10	AK20	Designation
		X	X	X	X				X	X	TCGT 06T101FN-ALU
	X										TCGT 06T102EN-ALU
		X	X	X	X	X	X	X	X	X	TCGT 06T102FN-ALU
	X										TCGT 090202EN-ALU
		X	X	X	X	X	X	X	X	X	TCGT 090202FN-ALU
	X										TCGT 090204EN-ALU
		X	X	X	X	X	X	X	X	X	TCGT 090204FN-ALU
	X										TCGT 110201EN-ALU
		X	X	X	X	X	X	X	X	X	TCGT 110201FN-ALU
	X										TCGT 110202EN-ALU
		X	X	X	X	X	X	X	X	X	TCGT 110202FN-ALU
	X										TCGT 110204EN-ALU
		X	X	X	X	X	X	X	X	X	TCGT 110204FN-ALU
	X										TCGT 16T301EN-ALU
		X	X	X	X	X	X	X	X	X	TCGT 16T301FN-ALU
	X										TCGT 16T302EN-ALU
		X	X	X	X	X	X	X	X	X	TCGT 16T302FN-ALU
	X										TCGT 16T304EN-ALU
		X	X	X	X	X	X	X	X	X	TCGT 16T304FN-ALU
	X										TCGT 16T308EN-ALU
		X	X	X	X	X	X	X	X	X	TCGT 16T308FN-ALU
	X										TCGT 16T312EN-ALU
		X	X	X	X	X	X	X	X	X	TCGT 16T312FN-ALU
	X										TCGT 16T316EN-ALU
		X	X	X	X	X	X	X	X	X	TCGT 16T316FN-ALU
		X	X	X	X	X	X	X	X	X	TCGT 110204FN-ACB
		X	X	X	X	X	X	X	X	X	TCGT 16T304FN-ACB
		X	X	X	X	X	X	X	X	X	TCGT 16T308FN-ACB
		X	X						X	X	TCGT 06T102FN-ASF
		X	X	X	X				X	X	TCGT 1102005FN-ASF
		X	X	X	X				X	X	TCGT 110201FN-ASF
		X	X	X	X				X	X	TCGT 110202FN-ASF
		X	X	X	X				X	X	TCGT 110204FN-ASF
		X	X	X	X				X	X	TCGT 16T301FN-ASF
		X	X	X	X				X	X	TCGT 16T302FN-ASF
		X	X	X	X				X	X	TCGT 16T304FN-ASF
									X		TCXT 16T304FN-AEC
P	○	●	●	○	○	○	○				P
M	●	●	●	○	○	○	○				M
K	●	○	○	○	○				○	○	K
N				●	●	●	●	●	●	●	N
S		○	○								S
H		○	○								H

X Available grade
● Main application
○ 2nd application

3

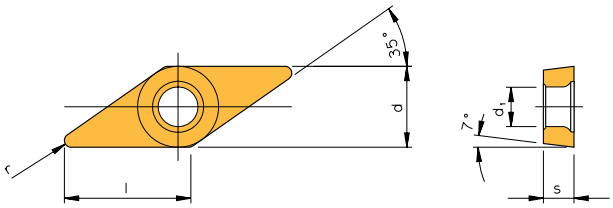

VC..

Designation	l	d	s	d_1	r	PG
VCGT 0702005FN-ALU	6,921	3,970	2,38	2,2	0,05	6
VCGT 070201EN-ALU	6,921	3,970	2,38	2,2	0,1	6
VCGT 070201FN-ALU	6,921	3,970	2,38	2,2	0,1	6
VCGT 070202EN-ALU	6,921	3,970	2,38	2,2	0,2	6
VCGT 070202FN-ALU	6,921	3,970	2,38	2,2	0,2	6
VCGT 070204EN-ALU	6,921	3,970	2,38	2,2	0,4	6
VCGT 070204FN-ALU	6,921	3,970	2,38	2,2	0,4	6
VCGT 1103005FN-ALU	11,10	6,350	3,18	2,9	0,05	6
VCGT 110301EN-ALU	11,10	6,350	3,18	2,9	0,1	6
VCGT 110301FN-ALU	11,10	6,350	3,18	2,9	0,1	6
VCGT 110302EN-ALU	11,10	6,350	3,18	2,9	0,2	6
VCGT 110302FN-ALU	11,10	6,350	3,18	2,9	0,2	6
VCGT 110304EN-ALU	11,10	6,350	3,18	2,9	0,4	6
VCGT 110304FN-ALU	11,10	6,350	3,18	2,9	0,4	6
VCGT 110308EN-ALU	11,10	6,350	3,18	2,9	0,8	6
VCGT 110308FN-ALU	11,10	6,350	3,18	2,9	0,8	6
VCGT 1303005FN-ALU	13,10	7,940	3,18	3,2	0,05	6
VCGT 130301EN-ALU	13,10	7,940	3,18	3,2	0,1	6
VCGT 130301FN-ALU	13,10	7,940	3,18	3,2	0,1	6
VCGT 130302EN-ALU	13,10	7,940	3,18	3,2	0,2	6
VCGT 130302FN-ALU	13,10	7,940	3,18	3,2	0,2	6
VCGT 130304EN-ALU	13,10	7,940	3,18	3,2	0,4	6
VCGT 130304FN-ALU	13,10	7,940	3,18	3,2	0,4	6
VCGT 130308EN-ALU	13,10	7,940	3,18	3,2	0,8	6
VCGT 130308FN-ALU	13,10	7,940	3,18	3,2	0,8	6
VCGT 160401FN-ALU	16,60	9,525	4,76	4,4	0,1	6
VCGT 160402EN-ALU	16,60	9,525	4,76	4,4	0,2	6
VCGT 160402FN-ALU	16,60	9,525	4,76	4,4	0,2	6
VCGT 160404EN-ALU	16,60	9,525	4,76	4,4	0,4	6
VCGT 160404FN-ALU	16,60	9,525	4,76	4,4	0,4	6
VCGT 160408EN-ALU	16,60	9,525	4,76	4,4	0,8	6
VCGT 160408FN-ALU	16,60	9,525	4,76	4,4	0,8	6
VCGT 160412EN-ALU	16,60	9,525	4,76	4,4	1,2	6
VCGT 160412FN-ALU	16,60	9,525	4,76	4,4	1,2	6
VCGT 220520EN-ALU	22,10	12,700	5,56	5,5	2,0	6
VCGT 220520FN-ALU	22,10	12,700	5,56	5,5	2,0	6
VCGT 220530FN-ALU	22,10	12,700	5,56	5,5	3,0	6

Dimensions in mm

Grade availability

	coated									uncoated		
	AM15C	AP5210 (PG22)	AL10	AL20	AT10	AT20	PVD1	PVD2	AD2 (PG21)	AK10	AK20	Designation
			X	X	X	X	X	X	X	X	X	VCGT 0702005FN-ALU
	X											VCGT 070201EN-ALU
			X	X	X	X	X	X	X	X	X	VCGT 070201FN-ALU
	X											VCGT 070202EN-ALU
			X	X	X	X	X	X	X	X	X	VCGT 070202FN-ALU
	X											VCGT 070204EN-ALU
			X	X	X	X	X	X	X	X	X	VCGT 070204FN-ALU
			X	X	X	X	X	X	X	X	X	VCGT 1103005FN-ALU
	X											VCGT 110301EN-ALU
			X	X	X	X	X	X	X	X	X	VCGT 110301FN-ALU
	X											VCGT 110302EN-ALU
			X	X	X	X	X	X	X	X	X	VCGT 110302FN-ALU
	X											VCGT 110304EN-ALU
			X	X	X	X	X	X	X	X	X	VCGT 110304FN-ALU
	X											VCGT 110308EN-ALU
			X	X	X	X	X	X	X	X	X	VCGT 110308FN-ALU
			X	X	X	X	X	X	X	X	X	VCGT 1303005FN-ALU
	X											VCGT 130301EN-ALU
			X	X	X	X	X	X	X	X	X	VCGT 130301FN-ALU
	X											VCGT 130302EN-ALU
		X	X	X	X	X	X	X	X	X	X	VCGT 130302FN-ALU
	X											VCGT 130304EN-ALU
			X	X	X	X	X	X	X	X	X	VCGT 130304FN-ALU
	X											VCGT 130308EN-ALU
			X	X	X	X	X	X	X	X	X	VCGT 130308FN-ALU
			X	X	X	X	X	X	X	X	X	VCGT 160401FN-ALU
	X											VCGT 160402EN-ALU
			X	X	X	X	X	X	X	X	X	VCGT 160402FN-ALU
	X											VCGT 160404EN-ALU
		X	X	X	X	X	X	X	X	X	X	VCGT 160404FN-ALU
	X											VCGT 160408EN-ALU
		X	X	X	X	X	X	X	X	X	X	VCGT 160408FN-ALU
	X											VCGT 160412EN-ALU
			X	X	X	X	X	X	X	X	X	VCGT 160412FN-ALU
											X	VCGT 220520EN-ALU
			X	X	X	X	X	X	X	X	X	VCGT 220520FN-ALU
			X	X	X	X	X	X	X	X	X	VCGT 220530FN-ALU

P	○	●	●	●	○	○	○	○				P
M	●	○	●	●	○	○	○	○				M
K	●	●	○	○	○	○				○	○	K
N					●	●	●	●	●	●	●	N
S		●	○	○								S
H			○	○								H

X Available grade

● Main application

○ 2nd application

3

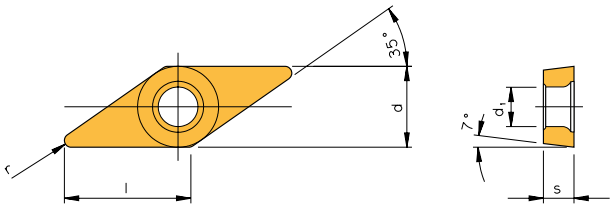

VC..

Designation	l	d	s	d_1	r	PG
VCGT 110302FN-AWI	11,10	6,350	3,18	2,9	0,2	6
VCGT 110304FN-AWI	11,10	6,350	3,18	2,9	0,4	6
VCGT 110308FN-AWI	11,10	6,350	3,18	2,9	0,8	6
VCGT 160404FN-AWI	16,60	9,525	4,76	4,4	0,4	6
VCGT 160408FN-AWI	16,60	9,525	4,76	4,4	0,8	6
VCGT 110304FN-ACB	11,10	6,350	3,18	2,9	0,4	6
VCGT 110308FN-ACB	11,10	6,350	3,18	2,9	0,8	6
VCGT 130304FN-ACB	13,10	7,940	3,18	3,2	0,4	6
VCGT 130308FN-ACB	13,10	7,940	3,18	3,2	0,8	6
VCGT 160404FN-ACB	16,60	9,525	4,76	4,4	0,4	6
VCGT 160408FN-ACB	16,60	9,525	4,76	4,4	0,8	6
VCGT 160412FN-ACB	16,60	9,525	4,76	4,4	1,2	6
VCGT 220520FN-ACB	22,10	12,700	5,56	5,5	2,0	6
VCGT 220530FN-ACB	22,10	12,700	5,56	5,5	3,0	6
VCGT 0702005FN-ASF	6,921	3,970	2,38	2,2	0,05	6
VCGT 070201FN-ASF	6,921	3,970	2,38	2,2	0,1	6
VCGT 070202EN-ASF	6,921	3,970	2,38	2,2	0,2	6
VCGT 070202FN-ASF	6,921	3,970	2,38	2,2	0,2	6
VCGT 070204EN-ASF	6,921	3,970	2,38	2,2	0,4	6
VCGT 070204FN-ASF	6,921	3,970	2,38	2,2	0,4	6
VCGT 1103005FN-ASF	11,10	6,350	3,18	2,9	0,05	6
VCGT 110301EN-ASF	11,10	6,350	3,18	2,9	0,1	6
VCGT 110301FN-ASF	11,10	6,350	3,18	2,9	0,1	6
VCGT 110302EN-ASF	11,10	6,350	3,18	2,9	0,2	6
VCGT 110302FN-ASF	11,10	6,350	3,18	2,9	0,2	6
VCGT 110304EN-ASF	11,10	6,350	3,18	2,9	0,4	6
VCGT 110304FN-ASF	11,10	6,350	3,18	2,9	0,4	6
VCGT 1303005FN-ASF	13,10	7,940	3,18	3,2	0,05	6
VCGT 130301EN-ASF	13,10	7,940	3,18	3,2	0,1	6
VCGT 130301FN-ASF	13,10	7,940	3,18	3,2	0,1	6
VCGT 130302EN-ASF	13,10	7,940	3,18	3,2	0,2	6
VCGT 130302FN-ASF	13,10	7,940	3,18	3,2	0,2	6
VCGT 130304EN-ASF	13,10	7,940	3,18	3,2	0,4	6
VCGT 130304FN-ASF	13,10	7,940	3,18	3,2	0,4	6
VCGT 160401FN-ASF	16,60	9,525	4,76	4,4	0,1	6
VCGT 160402EN-ASF	16,60	9,525	4,76	4,4	0,2	6
VCGT 160402FN-ASF	16,60	9,525	4,76	4,4	0,2	6
VCGT 160404EN-ASF	16,60	9,525	4,76	4,4	0,4	6
VCGT 160404FN-ASF	16,60	9,525	4,76	4,4	0,4	6
VCGT 160408EN-ASF	16,60	9,525	4,76	4,4	0,8	6
VCGT 160408FN-ASF	16,60	9,525	4,76	4,4	0,8	6
VCXT 110302FN-AEC	11,10	6,350	3,18	2,9	0,2	6
VCXT 110304FN-AEC	11,10	6,350	3,18	2,9	0,4	6
VCXT 160404FN-AEC	16,60	9,525	4,76	4,4	0,4	6
VCXT 160408FN-AEC	16,60	9,525	4,76	4,4	0,8	6
VCXT 160412FN-AEC	16,60	9,525	4,76	4,4	1,2	6
VCXT 220530FN-AEC	22,10	12,700	5,56	5,5	3,0	6

Dimensions in mm

Grade availability

	coated													uncoated		
	AM5015 (PG22)	AM5025 (PG22)	AM5110 (PG22)	AM5120 (PG22)	AM5220 (PG22)	AP5210 (PG22)	AL10	AL20	AT10	AT20	PVD1	PVD2	AD2 (PG21)	AK10	AK20	Designation
							X		X					X		VCGT 110302FN-AWI
							X		X					X		VCGT 110304FN-AWI
							X		X					X		VCGT 110308FN-AWI
							X		X					X		VCGT 160404FN-AWI
							X		X					X		VCGT 160408FN-AWI
						X	X	X	X	X	X	X	X	X	X	VCGT 110304FN-ACB
							X	X	X	X	X	X	X	X	X	VCGT 110308FN-ACB
							X	X	X	X	X	X	X	X	X	VCGT 130304FN-ACB
							X	X	X	X	X	X	X	X	X	VCGT 130308FN-ACB
							X	X	X	X	X	X	X	X	X	VCGT 160404FN-ACB
							X	X	X	X	X	X	X	X	X	VCGT 160408FN-ACB
							X	X	X	X	X	X	X	X	X	VCGT 160412FN-ACB
							X	X	X	X	X	X	X	X	X	VCGT 220520FN-ACB
							X	X	X	X	X	X	X	X	X	VCGT 220530FN-ACB
							X	X	X	X				X	X	VCGT 0702005FN-ASF
							X	X	X	X				X	X	VCGT 070201FN-ASF
		X													X	VCGT 070202EN-ASF
							X	X	X	X		X		X	X	VCGT 070202FN-ASF
		X													X	VCGT 070204EN-ASF
					X		X	X	X	X				X	X	VCGT 070204FN-ASF
				X			X	X	X	X				X	X	VCGT 1103005FN-ASF
	X														X	VCGT 110301EN-ASF
				X			X	X	X	X				X	X	VCGT 110301FN-ASF
	X	X													X	VCGT 110302EN-ASF
			X	X			X	X	X	X				X	X	VCGT 110302FN-ASF
	X	X													X	VCGT 110304EN-ASF
			X	X			X	X	X	X		X		X	X	VCGT 110304FN-ASF
							X	X	X	X				X	X	VCGT 1303005FN-ASF
															X	VCGT 130301EN-ASF
							X	X	X	X				X	X	VCGT 130301FN-ASF
	X														X	VCGT 130302EN-ASF
							X	X	X	X				X	X	VCGT 130302FN-ASF
	X														X	VCGT 130304EN-ASF
							X	X	X	X				X	X	VCGT 130304FN-ASF
							X	X	X	X				X	X	VCGT 160401FN-ASF
	X	X													X	VCGT 160402EN-ASF
							X	X	X	X				X	X	VCGT 160402FN-ASF
	X	X													X	VCGT 160404EN-ASF
							X	X	X	X		X		X	X	VCGT 160404FN-ASF
	X														X	VCGT 160408EN-ASF
							X	X	X	X				X	X	VCGT 160408FN-ASF
														X		VCXT 110302FN-AEC
														X		VCXT 110304FN-AEC
														X		VCXT 160404FN-AEC
														X		VCXT 160408FN-AEC
														X		VCXT 160412FN-AEC
															X	VCXT 220530FN-AEC

	AM5015 (PG22)	AM5025 (PG22)	AM5110 (PG22)	AM5120 (PG22)	AM5220 (PG22)	AP5210 (PG22)	AL10	AL20	AT10	AT20	PVD1	PVD2	AD2 (PG21)	AK10	AK20	
P	●		○	○	●	●	●	●	○	○	○	○				P
M	●	●	●	●	●	○	●	●	○	○	○	○				M
K	○		○	○	○	●	○	○	○	○				○	○	K
N			○	○					●	●	●	●	●	●	●	N
S	●	●	●	●	●	●	○	○								S
H	○		○	○	○		○	○								H

X Available grade
● Main application
○ 2nd application

3

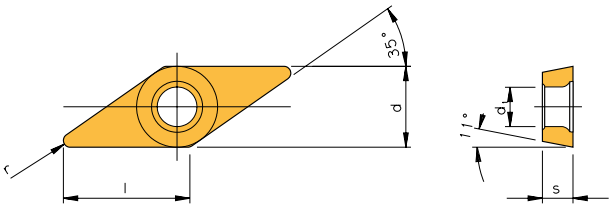

VP..

	Designation	l	d	s	d_1	r	PG
	VPGT 220512FN-ALU	22,10	12,700	5,56	5,5	1,2	**6**
	VPGT 220516FN-ALU	22,10	12,700	5,56	5,5	1,6	**6**
	VPGT 220530FN-ALU	22,10	12,700	5,56	5,5	3,0	**6**
	VPGT 220512FN-ACB	22,10	12,700	5,56	5,5	1,2	**6**
	VPGT 220516EN-ACB	22,10	12,700	5,56	5,5	1,6	**6**
	VPGT 220516FN-ACB	22,10	12,700	5,56	5,5	1,6	**6**
	VPGT 220512FN-ASF	22,10	12,700	5,56	5,5	1,2	**6**
	VPGW 220516FN	22,10	12,700	5,56	5,5	1,6	**6**
	VPXT 220516FN-AEC	22,10	12,700	5,56	5,5	1,6	**6**
	VPXT 220530FN-AEC	22,10	12,700	5,56	5,5	3,0	**6**

3

Dimensions in mm

Grade availability										
	coated							uncoated		
	AL10	AL20	AT10	AT20	PVD1	PVD2	AD2 (PG21)	AK10	AK20	Designation
	X	X	X	X				X	X	VPGT 220512FN-ALU
	X	X	X	X	X	X	X	X	X	VPGT 220516FN-ALU
									X	VPGT 220530FN-ALU
	X	X	X	X				X	X	VPGT 220512FN-ACB
									X	VPGT 220516EN-ACB
	X	X	X	X	X	X	X	X	X	VPGT 220516FN-ACB
			X	X				X	X	VPGT 220512FN-ASF
									X	VPGW 220516FN
									X	VPXT 220516FN-AEC
									X	VPXT 220530FN-AEC

P	●	●	○	○	○	○				P
M	●	●	○	○	○	○				M
K	○	○	○	○				○	○	K
N			●	●	●	●	●	●	●	N
S	○	○								S
H	○	○								H

X Available grade

● Main application

○ 2nd application

3

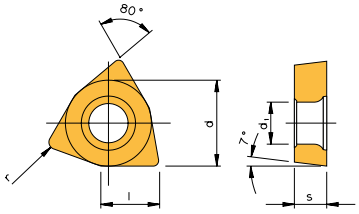

WC..

Designation	l	d	s	d_1	r	PG
WCGT 0201005FN-ALU	2,70	3,970	1,59	2,2	0,05	6
WCGT 020101FN-ALU	2,70	3,970	1,59	2,2	0,1	6
WCGT 020102FN-ALU	2,70	3,970	1,59	2,2	0,2	6
WCGT 020104FN-ALU	2,70	3,970	1,59	2,2	0,4	6
WCGT 030202EN-ALU	3,80	5,560	2,38	2,5	0,2	6
WCGT 030202FN-ALU	3,80	5,560	2,38	2,5	0,2	6
WCGT 030204EN-ALU	3,80	5,560	2,38	2,5	0,4	6
WCGT 030204FN-ALU	3,80	5,560	2,38	2,5	0,4	6
WCGT 040201EN-ALU	4,30	6,350	2,38	2,8	0,1	6
WCGT 040201FN-ALU	4,30	6,350	2,38	2,8	0,1	6
WCGT 040202EN-ALU	4,30	6,350	2,38	2,8	0,2	6
WCGT 040202FN-ALU	4,30	6,350	2,38	2,8	0,2	6
WCGT 040204EN-ALU	4,30	6,350	2,38	2,8	0,4	6
WCGT 040204FN-ALU	4,30	6,350	2,38	2,8	0,4	6
WCGT 06T301EN-ALU	6,50	9,525	3,97	4,4	0,1	6
WCGT 06T301FN-ALU	6,50	9,525	3,97	4,4	0,1	6
WCGT 06T302EN-ALU	6,50	9,525	3,97	4,4	0,2	6
WCGT 06T302FN-ALU	6,50	9,525	3,97	4,4	0,2	6
WCGT 06T304EN-ALU	6,50	9,525	3,97	4,4	0,4	6
WCGT 06T304FN-ALU	6,50	9,525	3,97	4,4	0,4	6
WCGT 080404EN-ALU	8,72	12,700	4,76	5,5	0,4	6
WCGT 080404FN-ALU	8,72	12,700	4,76	5,5	0,4	6
WCGT 080408EN-ALU	8,72	12,700	4,76	5,5	0,8	6
WCGT 080408FN-ALU	8,72	12,700	4,76	5,5	0,8	6
WCGT 040204FN-AWI	4,30	6,350	2,38	2,8	0,4	6
WCGT 040208FN-AWI	4,30	6,350	2,38	2,8	0,8	6
WCGT 06T304FN-AWI	6,50	9,525	3,97	4,4	0,4	6
WCGT 06T308FN-AWI	6,50	9,525	3,97	4,4	0,8	6
WCGT 080404FN-AWI	8,72	12,700	4,76	5,5	0,4	6
WCGT 080408FN-AWI	8,72	12,700	4,76	5,5	0,8	6
WCGT 040204FN-ACB	4,30	6,350	2,38	2,8	0,4	6
WCGT 06T304FN-ACB	6,50	9,525	3,97	4,4	0,4	6
WCGT 080404FN-ACB	8,72	12,700	4,76	5,5	0,4	6
WCGT 080408FN-ACB	8,72	12,700	4,76	5,5	0,8	6
WCGT 0402005FN-ASF	4,30	6,350	2,38	2,8	0,05	6
WCGT 040201FN-ASF	4,30	6,350	2,38	2,8	0,1	6
WCGT 040202FN-ASF	4,30	6,350	2,38	2,8	0,2	6
WCGT 040204FN-ASF	4,30	6,350	2,38	2,8	0,4	6
WCGT 06T3005FN-ASF	6,50	9,525	3,97	4,4	0,05	6
WCGT 06T301FN-ASF	6,50	9,525	3,97	4,4	0,1	6
WCGT 06T302FN-ASF	6,50	9,525	3,97	4,4	0,2	6
WCGT 06T304FN-ASF	6,50	9,525	3,97	4,4	0,4	6

Dimensions in mm

Grade availability

	coated							uncoated		
	AM15C	AL10	AL20	AT10	AT20	PVD1	PVD2	AD2 (PG21)	AK10	AK20	Designation
			X		X					X	WCGT 0201005FN-ALU
			X		X					X	WCGT 020101FN-ALU
			X		X					X	WCGT 020102FN-ALU
			X		X					X	WCGT 020104FN-ALU
	X										WCGT 030202EN-ALU
		X	X	X	X	X	X	X	X	X	WCGT 030202FN-ALU
	X										WCGT 030204EN-ALU
		X	X	X	X	X	X	X	X	X	WCGT 030204FN-ALU
	X										WCGT 040201EN-ALU
		X	X	X	X	X	X	X	X	X	WCGT 040201FN-ALU
	X										WCGT 040202EN-ALU
		X	X	X	X	X	X	X	X	X	WCGT 040202FN-ALU
	X										WCGT 040204EN-ALU
		X	X	X	X	X	X	X	X	X	WCGT 040204FN-ALU
	X										WCGT 06T301EN-ALU
		X	X	X	X	X	X	X	X	X	WCGT 06T301FN-ALU
	X										WCGT 06T302EN-ALU
		X	X	X	X	X	X	X	X	X	WCGT 06T302FN-ALU
	X										WCGT 06T304EN-ALU
		X	X	X	X	X	X	X	X	X	WCGT 06T304FN-ALU
	X										WCGT 080404EN-ALU
		X	X	X	X	X	X	X	X	X	WCGT 080404FN-ALU
	X										WCGT 080408EN-ALU
		X	X	X	X	X	X	X	X	X	WCGT 080408FN-ALU
		X		X					X		WCGT 040204FN-AWI
		X		X					X		WCGT 040208FN-AWI
		X		X					X		WCGT 06T304FN-AWI
		X		X					X		WCGT 06T308FN-AWI
		X		X					X		WCGT 080404FN-AWI
		X		X					X		WCGT 080408FN-AWI
		X	X	X	X	X	X	X	X	X	WCGT 040204FN-ACB
		X	X	X	X	X	X	X	X	X	WCGT 06T304FN-ACB
		X	X	X	X	X	X	X	X	X	WCGT 080404FN-ACB
		X	X	X	X	X	X	X	X	X	WCGT 080408FN-ACB
		X	X	X	X				X	X	WCGT 0402005FN-ASF
		X	X	X	X				X	X	WCGT 040201FN-ASF
		X	X	X	X				X	X	WCGT 040202FN-ASF
		X	X	X	X				X	X	WCGT 040204FN-ASF
		X	X	X	X				X	X	WCGT 06T3005FN-ASF
		X	X	X	X				X	X	WCGT 06T301FN-ASF
		X	X	X	X				X	X	WCGT 06T302FN-ASF
		X	X	X	X				X	X	WCGT 06T304FN-ASF

P	○	●	●	○	○	○	○				P
M	●	●	●	○	○	○	○				M
K	●	○	○	○	○				○	○	K
N				●	●	●	●	●	●	●	N
S		○	○								S
H		○	○								H

X Available grade
● Main application
○ 2nd application

3

Coated

AP6510

PVD-Multi layer coating

Fine grain (average grain size 0.6µm) Cermet. Grade for machining alloy and none alloy steel, stainless steel and cast steel. Should be applied for finishing and medium machining at high cutting speed. AP6510 gives long tool life, constant performance, low tendency for built-up edge, high chemical stability and low oxidation wear as well as a considerable wear resistance. When cutting wet, AP6510 shows considerably higher stability over traditional cermet.

AC90C

Coated Cermet grade for light to medium machining. Good combination between toughness and wear resistance. Because of PVD-coating very little tendency for build up edge.

Uncoated

AP6010

Fine grain (average grain size 0.6µm) cermet. Grade for machining alloy and none alloy steel, stainless steel and cast steel. Excellent tool life when finishing and medium machining. Suitable for high speed machining. This cermet has high chemical stability (comparable with carbide). This grade has low tendency for build up edge and excellent wear resistance. AP6010 excels at high cutting speed providing very good surface finish and high accuracy.

ACE6

Cermet grade with better toughness for machining steel at medium chip cross sections and medium cutting speeds. Good resistance against oxydation, flank wear and build up edge.

T15

Cermet auf TiC/TiN-Basis

Grade with very high wear resistance and toughness for machining steel, cast steel, spheroidal cast iron and sintered materiales. For finishing and medium machining.

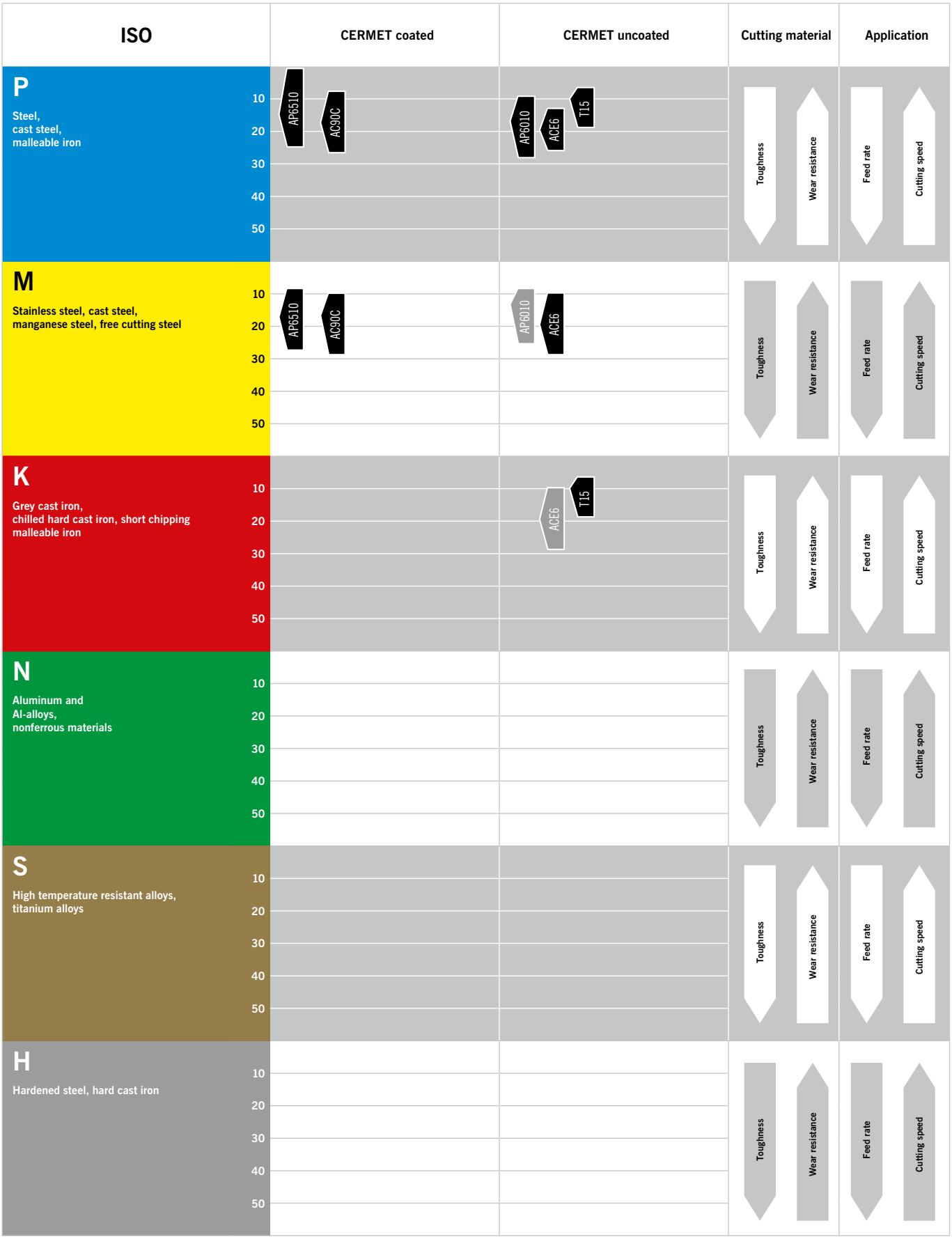

Main application area

AP6510 — Grade
Recommended application area

Secondary application area

AP6510 — Grade
Recommended application area

3

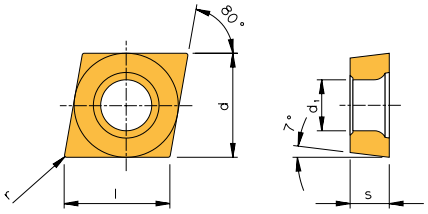

CC..

Designation	l	d	s	d_1	r	PG	Grade availability: coated AP6510	coated AC90C	uncoated AP6010	uncoated ACE6
CCGT 060202FL-FS	6,40	6,350	2,38	2,8	0,2	23				X
CCGT 060204FL-FS	6,40	6,350	2,38	2,8	0,4	23				X
CCGT 09T302FR-FS	9,70	9,525	3,97	4,4	0,2	23				X
CCGT 09T304FL-FS	9,70	9,525	3,97	4,4	0,4	23				X
CCGT 09T304FR-FS	9,70	9,525	3,97	4,4	0,4	23				X
CCGT 060201FL-U	6,40	6,350	2,38	2,8	0,1	23				X
CCGT 060201FR-U	6,40	6,350	2,38	2,8	0,1	23				X
CCGT 060202FL-U	6,40	6,350	2,38	2,8	0,2	23	X		X	X
CCGT 060202FR-U	6,40	6,350	2,38	2,8	0,2	23				X
CCGT 09T302ER-U	9,70	9,525	3,97	4,4	0,2	23			X	
CCGT 09T302FL-U	9,70	9,525	3,97	4,4	0,2	23				X
CCGT 09T302FR-U	9,70	9,525	3,97	4,4	0,2	23				X
CCGT 09T304ER-U	9,70	9,525	3,97	4,4	0,4	23			X	
CCGT 060202FN-Z	6,40	6,350	2,38	2,8	0,2	23			X	
CCGT 09T302FN-Z	9,70	9,525	3,97	4,4	0,2	23			X	
CCGT 09T304FN-Z	9,70	9,525	3,97	4,4	0,4	23			X	
CCGT 060201EN	6,40	6,350	2,38	2,8	0,1	23				X
CCGT 060202EN	6,40	6,350	2,38	2,8	0,2	23	X	X	X	X
CCGT 060204EN	6,40	6,350	2,38	2,8	0,4	23	X	X	X	X
CCGT 09T301EN	9,70	9,525	3,97	4,4	0,1	23				X
CCGT 09T302EN	9,70	9,525	3,97	4,4	0,2	23	X			X
CCGT 09T304EN	9,70	9,525	3,97	4,4	0,4	23	X			X
CCMT 060202EN-AQ	6,40	6,350	2,38	2,8	0,2	23				X
CCMT 060204EN-AQ	6,40	6,350	2,38	2,8	0,4	23		X		X
CCMT 09T302EN-AQ	9,70	9,525	3,97	4,4	0,2	23	X		X	X
CCMT 09T304EN-AQ	9,70	9,525	3,97	4,4	0,4	23	X	X	X	X
CCMT 09T308EN-AQ	9,70	9,525	3,97	4,4	0,8	23	X		X	X
CCMT 060202EN-PMC	6,40	6,350	2,38	2,8	0,2	23	X		X	
CCMT 060204EN-PMC	6,40	6,350	2,38	2,8	0,4	23	X		X	
CCMT 09T304EN-PMC	9,70	9,525	3,97	4,4	0,4	23	X			
CCMT 120404EN-PMC	12,90	12,700	4,76	5,5	0,4	23	X			

X Available grade
● Main application
○ 2nd application

	AP6510	AC90C	AP6010	ACE6
P	●	●	●	●
M	●	●	○	●
K				○
N				
S				
H				

3

Dimensions in mm

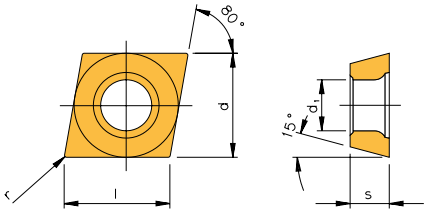

CD..

Designation	l	d	s	d_1	r	PG	Grade availability uncoated ACE6
CDGT 040101FL	4,03	3,970	1,0	2,1	0,1	23	X
CDGT 040102FL	4,03	3,970	1,0	2,1	0,2	23	X
CDGT 040102FR	4,03	3,970	1,0	2,1	0,2	23	X
CDGT 040104FL	4,03	3,970	1,0	2,1	0,4	23	X
CDGT 040104FR	4,03	3,970	1,0	2,1	0,4	23	X

X Available grade
● Main application
○ 2nd application

P	●
M	●
K	○
N	
S	
H	

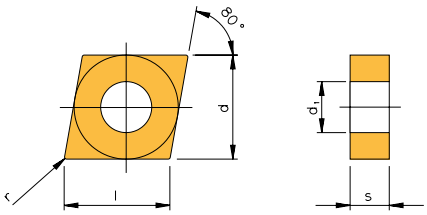

CN..

Designation	l	d	s	d_1	r	PG	Grade availability coated AP6510	uncoated ACE6
CNMG 120404EN-AQ	12,90	12,700	5,16	5,16	0,4	23	X	X
CNMG 120408EN-AQ	12,90	12,700	5,16	5,16	0,8	23		X
CNMG 120404EN-NFC	12,90	12,700	5,16	5,16	0,4	23	X	
CNMG 120404EN	12,90	12,700	5,16	5,16	0,4	23		X
CNMG 120408EN	12,90	12,700	5,16	5,16	0,8	23		X

X Available grade
● Main application
○ 2nd application

P	●	●
M	●	●
K		○
N		
S		
H		

3

Dimensions in mm

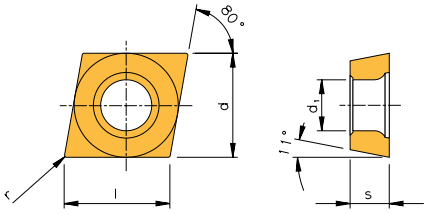

CP..

Designation	l	d	s	d_1	r	PG	Grade availability uncoated ACE6
CPET 05T102FL	5,60	5,560	1,98	2,5	0,2	23	X
CPET 05T102FR	5,60	5,560	1,98	2,5	0,2	23	X
CPGT 05T102EN	5,60	5,560	1,98	2,5	0,2	23	X
CPGT 05T104EN	5,60	5,560	1,98	2,5	0,4	23	X
CPMT 05T102EN	5,60	5,560	1,98	2,5	0,2	23	X

X Available grade
● Main application
○ 2nd application

P	●
M	●
K	○
N	
S	
H	

3

Dimensions in mm

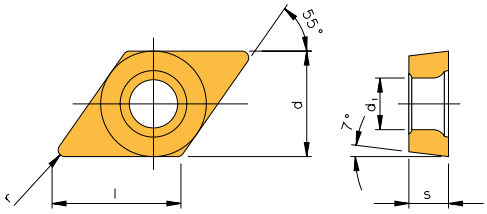

DC..

Designation	l	d	s	d_1	r	PG	Grade availability: coated AP6510	coated AC90C	uncoated AP6010	uncoated ACE6
DCGT 070202FR-FS	7,70	6,350	2,38	2,8	0,2	23				X
DCGT 070204FR-FS	7,70	6,350	2,38	2,8	0,4	23				X
DCGT 11T302FL-FS	11,60	9,525	3,97	4,4	0,2	23				X
DCGT 11T302FR-FS	11,60	9,525	3,97	4,4	0,2	23				X
DCGT 11T304FL-FS	11,60	9,525	3,97	4,4	0,4	23				X
DCGT 11T304FR-FS	11,60	9,525	3,97	4,4	0,4	23				X
DCGT 070201FL-U	7,70	6,350	2,38	2,8	0,1	23				X
DCGT 070202FL-U	7,70	6,350	2,38	2,8	0,2	23				X
DCGT 070202FR-U	7,70	6,350	2,38	2,8	0,2	23				X
DCGT 11T301FL-U	11,60	9,525	3,97	4,4	0,1	23				X
DCGT 11T301FR-U	11,60	9,525	3,97	4,4	0,1	23				X
DCGT 11T302EL-U	11,60	9,525	3,97	4,4	0,2	23	X		X	
DCGT 11T302ER-U	11,60	9,525	3,97	4,4	0,2	23	X			
DCGT 11T302FL-U	11,60	9,525	3,97	4,4	0,2	23				X
DCGT 11T302FR-U	11,60	9,525	3,97	4,4	0,2	23	X			X
DCGT 11T304EL-U	11,60	9,525	3,97	4,4	0,4	23			X	
DCGT 11T304ER-U	11,60	9,525	3,97	4,4	0,4	23				X
DCGT 070202FN-Z	7,70	6,350	2,38	2,8	0,2	23			X	X
DCGT 070204FN-Z	7,70	6,350	2,38	2,8	0,4	23	X			
DCGT 11T302FN-Z	11,60	9,525	3,97	4,4	0,2	23			X	
DCGT 11T304FN-Z	11,60	9,525	3,97	4,4	0,4	23	X		X	
DCGT 070201EN	7,70	6,350	2,38	2,8	0,1	23				X
DCGT 070202EN	7,70	6,350	2,38	2,8	0,2	23				X
DCGT 070204EN	7,70	6,350	2,38	2,8	0,4	23				X
DCGT 11T301EN	11,60	9,525	3,97	4,4	0,1	23				X
DCGT 11T302EN	11,60	9,525	3,97	4,4	0,2	23	X	X	X	X
DCGT 11T304EN	11,60	9,525	3,97	4,4	0,4	23	X	X	X	X
DCMT 070202EN-AQ	7,70	6,350	2,38	2,8	0,2	23			X	X
DCMT 070204EN-AQ	7,70	6,350	2,38	2,8	0,4	23	X	X	X	X
DCMT 11T302EN-AQ	11,60	9,525	3,97	4,4	0,2	23	X	X	X	X
DCMT 11T304EN-AQ	11,60	9,525	3,97	4,4	0,4	23	X	X	X	X
DCMT 11T308EN-AQ	11,60	9,525	3,97	4,4	0,8	23	X		X	X
DCMT 070202EN-PMC	7,70	6,350	2,38	2,8	0,2	23	X			
DCMT 070204EN-PMC	7,70	6,350	2,38	2,8	0,4	23	X		X	
DCMT 070208EN-PMC	7,70	6,350	2,38	2,8	0,8	23			X	
DCMT 11T302EN-PMC	11,60	9,525	3,97	4,4	0,2	23	X			
DCMT 11T304EN-PMC	11,60	9,525	3,97	4,4	0,4	23	X		X	
DCMT 11T308EN-PMC	11,60	9,525	3,97	4,4	0,8	23	X		X	

X Available grade
● Main application
○ 2nd application

	AP6510	AC90C	AP6010	ACE6
P	●	●	●	●
M	●	●	○	●
K				○
N				
S				
H				

3

Dimensions in mm

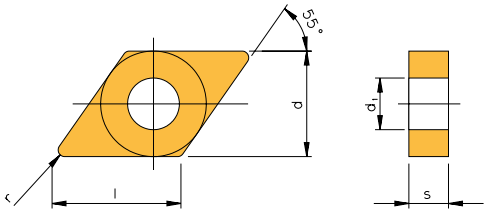

DN..

Designation	l	d	s	d_1	r	PG	Grade availability coated AP6510	coated AC90C	uncoated ACE6
DNMG 110402EN-AQ	11,60	9,525	4,76	3,81	0,2	23			X
DNMG 110404EN-AQ	11,60	9,525	4,76	3,81	0,4	23		X	X
DNMG 150604EN-AQ	15,50	12,700	6,35	5,16	0,4	23	X		X
DNMG 150608EN-AQ	15,50	12,700	6,35	5,16	0,8	23	X		X
DNMG 150608EN-NMC	15,50	12,700	6,35	5,16	0,8	23			X

X Available grade
● Main application
○ 2nd application

	AP6510	AC90C	ACE6
P	●	●	●
M	●	●	●
K			○
N			
S			
H			

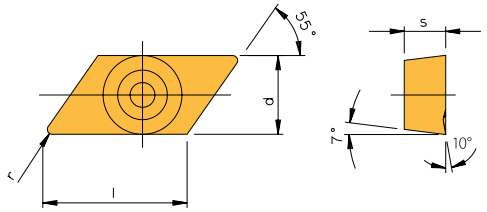

KC..

Designation	l	d	s	r	PG	Grade availability uncoated T15
KCGX 110301FL-S	11,60	6,350	3,18	0,1	17	X
KCGX 110302FL-S	11,60	6,350	3,18	0,2	17	X
KCGX 110302FR-S	11,60	6,350	3,18	0,2	17	X
KCGX 110304FL-S	11,60	6,350	3,18	0,4	17	X
KCGX 110304FR-S	11,60	6,350	3,18	0,4	17	X

X Available grade
● Main application
○ 2nd application

	T15
P	●
M	
K	●
N	
S	
H	

Dimensions in mm

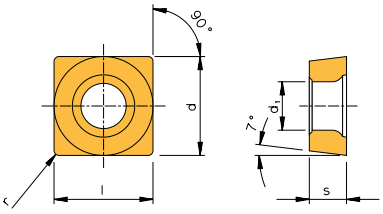

SC..

Designation	l	d	s	d_1	r	PG	Grade availability uncoated ACE6
SCMT 09T304EN-AQ	9,525	9,525	3,97	4,4	0,4	23	X
SCMT 09T308EN-AQ	9,525	9,525	3,97	4,4	0,8	23	X

X Available grade
● Main application
○ 2nd application

P	●
M	●
K	○
N	
S	
H	

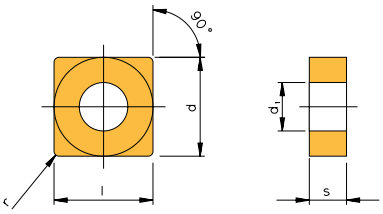

SN..

Designation	l	d	s	d_1	r	PG	Grade availability coated AP6510	uncoated AP6010
SNMG 120404EN-AQ	12,700	12,700	4,76	5,16	0,4	23	X	
SNMG 120412EN-NMC	12,700	12,700	4,76	5,16	1,2	23		X

X Available grade
● Main application
○ 2nd application

P	●	●
M	●	○
K		
N		
S		
H		

3

Dimensions in mm

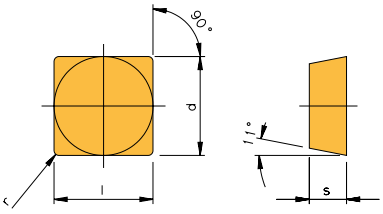

SP..

Designation	l	d	s	r	PG	Grade availability uncoated ACE6
SPMR 120304EN-G	12,700	12,700	3,18	0,4	23	X

X Available grade
● Main application
○ 2nd application

P	●
M	●
K	○
N	
S	
H	

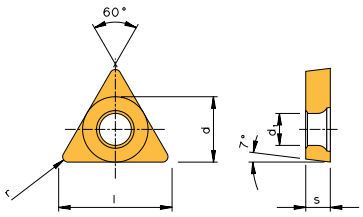

TC..

Designation	l	d	s	d_1	r	PG	Grade availability uncoated AP6010	ACE6
TCGT 110202FL	11,00	6,350	2,38	2,8	0,2	23		X
TCGT 110204FL	11,00	6,350	2,38	2,8	0,4	23		X
TCMT 090202EN-AQ	9,60	5,560	2,38	2,5	0,2	23		X
TCMT 090204EN-AQ	9,60	5,560	2,38	2,5	0,4	23		X
TCMT 110202EN-AQ	11,00	6,350	2,38	2,8	0,2	23		X
TCMT 110204EN-AQ	11,00	6,350	2,38	2,8	0,4	23	X	X
TCMT 110208EN-AQ	11,00	6,350	2,38	2,8	0,8	23		X
TCMT 16T304EN-AQ	16,50	9,525	3,97	4,4	0,4	23		X

X Available grade
● Main application
○ 2nd application

P	●	●
M	○	●
K		○
N		
S		
H		

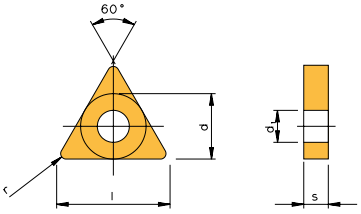

TN..

Designation	l	d	s	d_1	r	PG	Grade availability coated AP6510	uncoated AP6010	uncoated ACE6
TNGG 160402FR-C	16,50	9,525	4,76	3,81	0,2	23		X	
TNGG 160404FL-S	16,50	9,525	4,76	3,81	0,4	23	X		
TNGG 160404FR-S	16,50	9,525	4,76	3,81	0,4	23	X	X	
TNMG 110404EN-AQ	11,00	6,350	4,76	2,26	0,4	23			X
TNMG 160404EN-AQ	16,50	9,525	4,76	3,81	0,4	23	X	X	X
TNMG 160408EN-AQ	16,50	9,525	4,76	3,81	0,8	23	X	X	X
TNMG 160404EN	16,50	9,525	4,76	3,81	0,4	23		X	

X Available grade
● Main application
○ 2nd application

P	●	●	●
M	●	○	●
K			○
N			
S			
H			

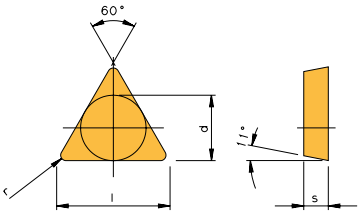

TP..

Designation	l	d	s	r	PG	Grade availability uncoated AP6010	uncoated ACE6
TPGN 110304EN	11,00	6,350	3,18	0,4	23		X
TPGN 160308EN	16,50	9,525	3,18	0,8	23		X
TPGR 160304FL-B	16,50	9,525	3,18	0,4	23	X	
TPMR 110304EN-AQ	11,00	6,350	3,18	0,4	23		X
TPMR 160308EN-AQ	16,50	9,525	3,18	0,8	23		X

X Available grade
● Main application
○ 2nd application

P	●	●
M	○	●
K		○
N		
S		
H		

3

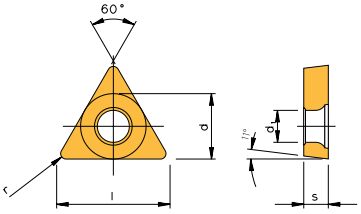

TP..

Designation	l	d	s	d_1	r	PG	Grade availability coated AP6510	Grade availability uncoated AP6010
TPMT 090202EN-AQ	9,60	5,560	2,38	2,8	0,2	23	X	
TPMT 090204EN-AQ	9,60	5,560	2,38	2,8	0,4	23	X	
TPMT 110304EN-AQ	11,00	6,350	3,18	3,3	0,4	23	X	X

● Main application
○ 2nd application

	AP6510	AP6010
P	●	●
M	●	○
K		
N		
S		
H		

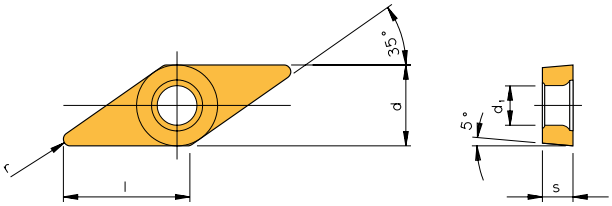

VB..

Designation	l	d	s	d_1	r	PG	Grade availability coated AP6510	Grade availability uncoated AP6010	Grade availability uncoated ACE6
VBMT 110304EN-AQ	11,10	6,350	3,18	2,8	0,4	23	X		X
VBMT 110308EN-AQ	11,10	6,350	3,18	2,8	0,8	23			X
VBMT 160404EN-AQ	16,60	9,525	4,76	4,4	0,4	23	X	X	X
VBMT 160408EN-AQ	16,60	9,525	4,76	4,4	0,8	23	X		X
VBMT 160412EN-AQ	16,60	9,525	4,76	4,4	1,2	23	X		

X Available grade
● Main application
○ 2nd application

	AP6510	AP6010	ACE6
P	●	●	●
M	●	○	●
K			○
N			
S			
H			

Dimensions in mm

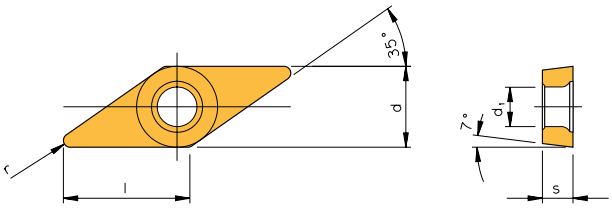

VC..

Designation	l	d	s	d_1	r	PG	Grade availability coated AC90C	Grade availability uncoated ACE6
VCGT 110302FL-Y	11,100	6,350	3,18	2,8	0,2	23		X
VCGT 110302FR-Y	11,100	6,350	3,18	2,8	0,2	23		X
VCGT 110304FL-Y	11,100	6,350	3,18	2,8	0,4	23		X
VCGT 110304FR-Y	11,100	6,350	3,18	2,8	0,4	23		X
VCGT 160404FL-Y	16,600	9,525	4,76	4,4	0,4	23		X
VCGT 160404FR-Y	16,600	9,525	4,76	4,4	0,4	23		X
VCGT 110301FN-Z	11,100	6,350	3,18	2,8	0,1	23		X
VCGT 110302FN-Z	11,100	6,350	3,18	2,8	0,2	23		X
VCGT 110304FN-Z	11,100	6,350	3,18	2,8	0,4	23		X
VCGT 070201FR	6,921	3,970	2,38	2,2	0,1	23		X
VCGT 070202FL	6,921	3,970	2,38	2,2	0,2	23		X
VCGT 070202FR	6,921	3,970	2,38	2,2	0,2	23		X
VCGT 070202EN	6,921	3,970	2,38	2,2	0,2	23		X
VCGT 070204EN	6,921	3,970	2,38	2,2	0,4	23		X
VCMT 110304EN-AQ	11,100	6,350	3,18	2,8	0,4	23		X
VCMT 160404EN-AQ	16,600	9,525	4,76	4,4	0,4	23	X	X
VCMT 160408EN-AQ	16,600	9,525	4,76	4,4	0,8	23	X	X

X Available grade
● Main application
○ 2nd application

	coated AC90C	uncoated ACE6
P	●	●
M	●	●
K		○
N		
S		
H		

3

Dimensions in mm

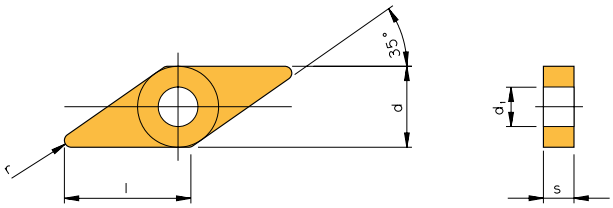

VN..

Designation	l	d	s	d_1	r	PG	Grade availability coated AP6510	uncoated AP6010	uncoated ACE6
VNMG 160404EN-AQ	16,60	9,525	4,76	3,81	0,4	23	X		X
VNMG 160408EN-AQ	16,60	9,525	4,76	3,81	0,8	23	X		X
VNMG 160404EN	16,60	9,525	4,76	3,81	0,4	23		X	

X Available grade
● Main application
○ 2nd application

	coated AP6510	uncoated AP6010	uncoated ACE6
P	●	●	●
M	●	○	●
K			○
N			
S			
H			

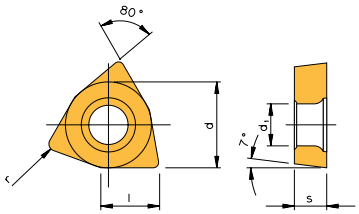

WC..

Designation	l	d	s	d_1	r	PG	Grade availability uncoated ACE6
WCGT 020102EN	2,70	3,970	1,59	2,2	0,2	23	X
WCGT 020104EN	2,70	3,970	1,59	2,2	0,4	23	X
WCGT 020101FR	2,70	3,970	1,59	2,2	0,1	23	X
WCGT 020102FL	2,70	3,970	1,59	2,2	0,2	23	X
WCGT 020102FR	2,70	3,970	1,59	2,2	0,2	23	X
WCGT 020104FL	2,70	3,970	1,59	2,2	0,4	23	X
WCMT 020102EN	2,70	3,970	1,59	2,2	0,2	23	X
WCMT 020104EN	2,70	3,970	1,59	2,2	0,4	23	X

X Available grade
● Main application
○ 2nd application

	uncoated ACE6
P	●
M	●
K	○
N	
S	
H	

Dimensions in mm

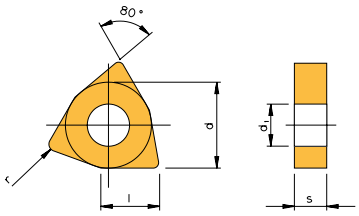

WN..

Designation	l	d	s	d_1	r	PG	Grade availability: coated AP6510	coated AC90C	uncoated ACE6
WNMG 060404EN-AQ	6,50	9,525	4,76	3,81	0,4	23		X	X
WNMG 080404EN-NWC	8,70	12,700	4,76	5,16	0,4	23	X		

X Available grade
● Main application
○ 2nd application

	AP6510	AC90C	ACE6
P	●	●	●
M	●	●	●
K			○
N			
S			
H			

Application reference on WIPER geometries on pages 276-277

3

Chip Breaker Overview

Chamfer design CBN

-AM
The **AM-geometry is ideal for general hard turning** and should be applied in uninterrupted cutting conditions, can also be used for light interrupted cuts.

-AR
The **AR-geometry has an enhanced cutting edge protection** and in combination with the tough grade (AH7825) is stronger than the AM design. This geometry is only applied in heavy interrupted cutting conditions and is only available on request.

-AF
The **AF-geometry is designed for small parts machining**. The chamfer design creates less cutting forces and in combination with grade AH7610 or AH7810 is designed for high speed machining in uninterrupted cutting conditions, also suitable for internal machining. The AF geometry is only available on request.

Chip breaker design PCD

-PFU
The **PFU-chip breaker is designed for super finish and finish machining.** ap from .002“ (0.05mm) to .063“ (1.6mm). It is ideal for thin walled or unstable work pieces. Low cutting pressure and optimal chip breaking are the main benefits of the PFU chip breaker.

-PMU
The **PMU-chip breaker is designed for super finish to semi finish machining.** ap from .016“ (0.4mm) to .087“ (2.2mm). Due to slight negative geometry the cutting pressure is increased and better surface finish is achieved. Best applications are massive parts with thick walls and stable conditions. Only available on request.

3

Description code – Inserts

O-	CCGW 120404 CCGW 431	TN	-AM	-2	AH7810
One-way	ISO/ANSI-Designation	TN = chamfered edge FN = sharp edge	Chamfer design	Number of edges	Grade description

CBN grade description

AH7610 CBN uncoated

Polycrystalline Cubic Boron Nitride grade with a high content CBN tip brazed on a micro grain carbide pad. Perfect flank wear resistance and toughness for machining steel up to Vc 230m/min (755f/min).

AH7616 CBN uncoated

The new "AH7616" grade is an ultra fine grain CBN-grade, with a special ceramic mix on a carbide base. The application area is in continuous cutting or light interrupted finishing of hardened steel from 55-65HRC. Effectively machine materials exceeding 65HRC is also possible. Speeds up to VC 180m/min (590f/min).

AH7620 CBN uncoated

Polycrystalline Cubic Boron Nitride grade with a low content CBN tip brazed on a micro grain carbide pad. Excellent wear resistance, compression strength and toughness for hard cutting (54-64HRC). General purpose for continuous and slightly interrupted cutting at surface finish Ra 1,6µ - 3,2µ. Hardened steels (45-62HRC) in wet and dry cutting applications for Ra 1,6µ - 3,2µ with a depth of cut ap 0,05-0,4mm, Vc= 80-180m/min (260-590f/min).

AH7810 CBN coated

High precision and ultra-high-speed machining

The newly developed coating which reduces insert and component friction and thereby improves the insert wear resistance allows high precision machining with extremely good surface finish at speeds of up to Vc 250m/min (820f/min).

AH7816 CBN coated

Uninterrupted and lightly interrupted cut at high cutting speeds

By combining the stable substrate with the especially wear resistant coating the inserts cover a vast range of applications from continuous cutting to light interrupted cutting. AH7816 is therefore more versatile than original CBN grades. Speeds up to Vc 200m/min (656f/min).

AH7820 CBN coated

Interrupted cutting at reduced and high cutting speed

The combination of a ceramic coating and the thermal resistance of the CBN grade make it possible to machine hardened steel with an interrupted cut at both reduced and high cutting speeds (up to Vc 200m/min (656f/min)).

AH7825 CBN coated

For heavy interrupted cutting

Fine grain CBN grade with excellent toughness and a wear resistant coating. Speeds up to 150m/min (492f/min), only available on request.

AH7510 CBN uncoated

Allround grade for different materials

Polycrystalline Cubic Boron Nitride grade with a high content CBN tip brazed on a micro grain carbide pad. Perfect flank wear resistance and toughness. HSC and super finishing of grey cast iron and finishing of super alloys as well as sintered powder alloys. Only available on request.

PCD grade description

AN8020 PCD uncoated

Polycrystalline, carbide reinforced diamond on medium grain carbide pad. General machining of all non-ferrous materials and non-ferrous materials with low to medium portions of abrasive filler materials and a silicon content of <12%. Finishing and general purpose machining at high cutting speeds. Grain size 10μ.

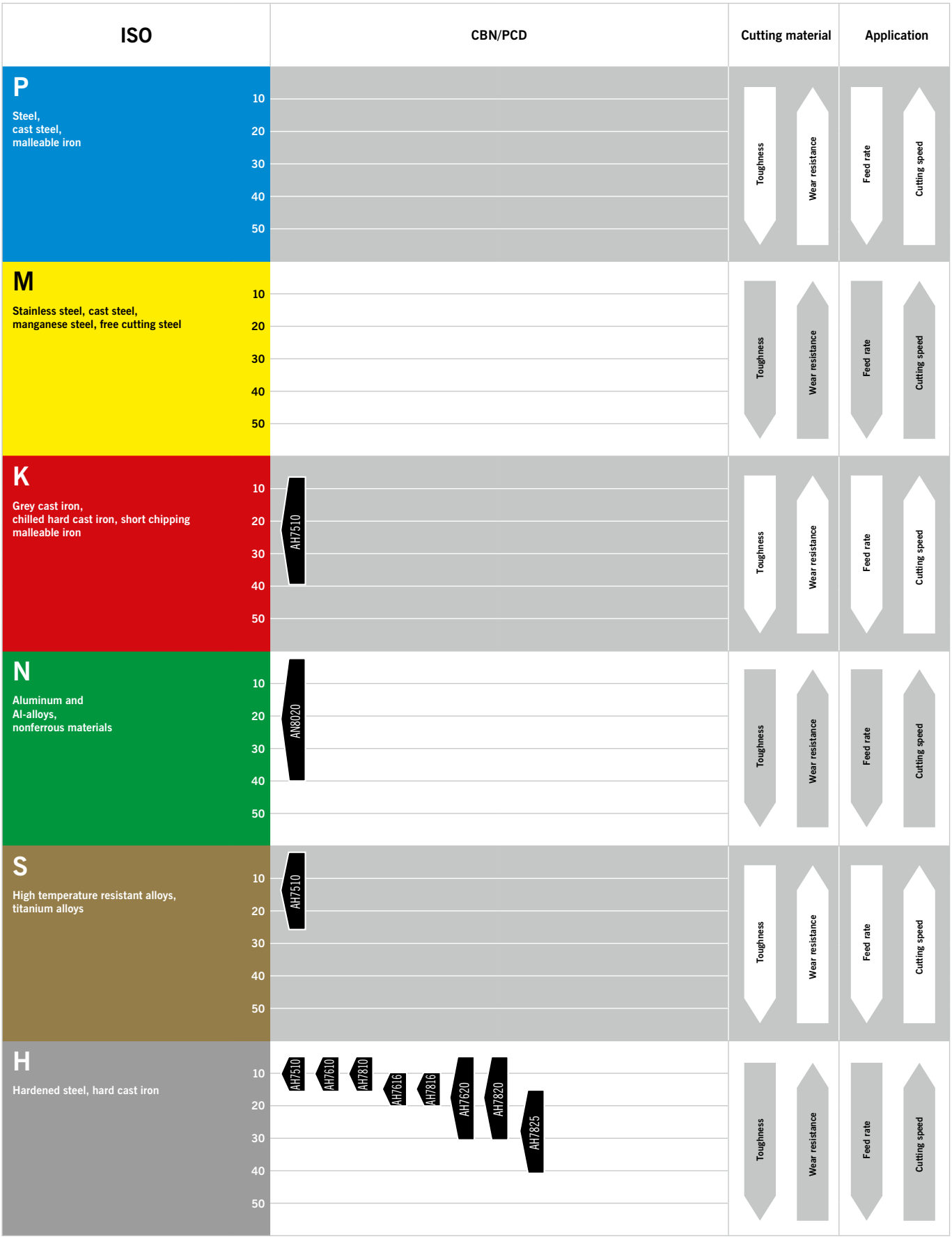

Main application area

AH7610 — Grade
Recommended application area

Secondary application area

AH7610 — Grade
Recommended application area

3

ARNO Shark-CUT®

Drilling and Turning with the same tool.

ARNO SHARK-CUT®

The specially developed multi purpose tools for turning and drilling.

- Problem solver when open slots in turret are limited
- Less programming
- Shorter set-up time
- Reduced preset time
- Reduced inventory of tools and inserts
- Lower cost for buying tools

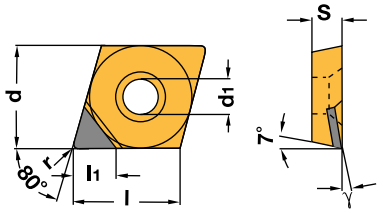

CCGT
Multiple-way

PCD

ANSI	ISO	d	d_1	s	l	l_1	a	r	Grade availability AN8020
CCGT 21.50.5FN-1	CCGT 060202FN-1	6.35	2.8	2.38	6.45	3.0 (1x)	7°	0.2	●
CCGT 21.51FN-1	CCGT 060204FN-1	6.35	2.8	2.38	6.45	3.0 (1x)	7°	0.4	●
CCGT 32.51FN-1	CCGT 09T304FN-1	9.52	4.4	3.97	9.7	4.0 (1x)	10°	0.4	●
CCGT 431FN-1	CCGT 120404FN-1	12.7	5.5	4.76	12.9	4.0 (1x)	10°	0.4	●

Custom radii, ICs, edge configurations and grades are available on request.

P	
M	
K	
N	●
S	
H	

3

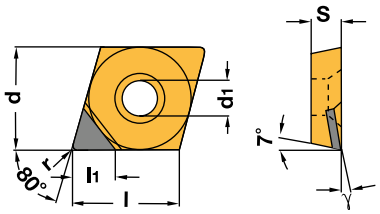

CCGT
Lasered chip breaker
Multiple-way

PCD

ANSI	ISO	d	d_1	s	l	l_1	a	r	Grade availability AN8020
CCGT 21.50.5FN-PFU	CCGT 060202FN-PFU	6.35	2.8	2.38	6.45	3.0 (1x)	7°	0.2	●
CCGT 21.51FN-PFU	CCGT 060204FN-PFU	6.35	2.8	2.38	6.45	3.0 (1x)	7°	0.4	●
CCGT 32.50.5FN-PFU	CCGT 09T302FN-PFU	9.52	4.4	3.97	9.70	4.0 (1x)	10°	0.2	●
CCGT 32.51FN-PFU	CCGT 09T304FN-PFU	9.52	4.4	3.97	9.70	4.0 (1x)	10°	0.4	●
CCGT 32.52FN-PFU	CCGT 09T308FN-PFU	9.52	4.4	3.97	9.70	4.0 (1x)	10°	0.8	●
CCGT 21.50.5FN-PMU	CCGT 060202FN-PMU	6.35	2.8	2.38	6.45	3.0 (1x)	7°	0.2	×
CCGT 21.51FN-PMU	CCGT 060204FN-PMU	6.35	2.8	2.38	6.45	3.0 (1x)	7°	0.4	×
CCGT 32.50.5FN-PMU	CCGT 09T302FN-PMU	9.52	4.4	3.97	9.70	4.0 (1x)	10°	0.2	×
CCGT 32.51FN-PMU	CCGT 09T304FN-PMU	9.52	4.4	3.97	9.70	4.0 (1x)	10°	0.4	×
CCGT 32.52FN-PMU	CCGT 09T308FN-PMU	9.52	4.4	3.97	9.70	4.0 (1x)	10°	0.8	×

Custom radii, ICs, edge configurations and grades are available on request.

P	
M	
K	
N	●
S	
H	

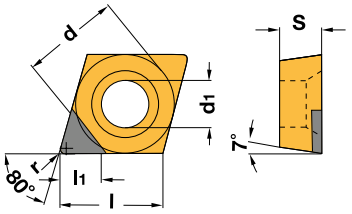

CCGW
Multiple way

uncoated CBN, PCD

ANSI	ISO	d	d_1	s	l	l_1	r	Grade availability AH7610	AH7616	AN8020
CCGW 21.50.5FN-1	CCGW 060202FN-1	6.35	2.8	2.38	6.45	3.0 (1x)	0.2			●
CCGW 21.50.5TN-AM-1	CCGW 060202TN-AM-1	6.35	2.8	2.38	6.45	3.0 (1x)	0.2	×	●	
CCGW 21.51FN-1	CCGW 060204FN-1	6.35	2.8	2.38	6.45	3.0 (1x)	0.4			●
CCGW 21.51TN-AM-1	CCGW 060204TN-AM-1	6.35	2.8	2.38	6.45	3.0 (1x)	0.4	×	●	
CCGW 32.50.5FN-1	CCGW 09T302FN-1	9.53	4.4	3.97	9.67	4.0 (1x)	0.2			●
CCGW 31.51FN-1	CCGW 09T304FN-1	9.53	5.5	3.97	9.67	4.0 (1x)	0.4			●
CCGW 31.52FN-1	CCGW 09T308FN-1	9.53	5.5	3.97	9.67	4.0 (1x)	0.8			●
CCGW 431FN-1	CCGW 120404FN-1	12.7	5.5	4.76	12.9	4.0 (1x)	0.4			●

Custom radii, ICs, edge configurations and grades are available on request.

P			
M			
K			
N			●
S			
H	●	●	

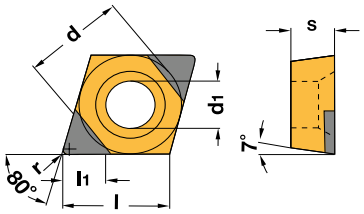

CCGW
One-way

CBN

ANSI	ISO	d	d_1	s	l	l_1	r	Grade availability uncoated AH7610	AH7616	AH7620	coated AH7810	AH7816	AH7820
O-CCGW 32.50.5TN-AM-2	O-CCGW 09T302TN-AM-2	9.52	2.8	3.97	9.7	2.5 (2x)	0.2	×	●	×			
O-CCGW 32.51TN-AM-2	O-CCGW 09T304TN-AM-2	9.52	4.4	3.97	9.7	2.5 (2x)	0.4	×	●	×	●	●	●
O-CCGW 32.52TN-AM-2	O-CCGW 09T308TN-AM-2	9.52	4.4	3.97	9.7	2.5 (2x)	0.8	×	●	×	●	●	●
O-CCGW 431TN-AM-2	O-CCGW 120404TN-AM-2	12.7	5.5	4.76	12.9	2.5 (1x)	0.4		●				
O-CCGW 432TN-AM-2	O-CCGW 120408TN-AM-2	12.7	5.5	4.76	12.9	2.5 (1x)	0.8		●				

Custom radii, ICs, edge configurations and grades are available on request.

P						
M						
K						
N						
S						
H	●	●	●	●	●	●

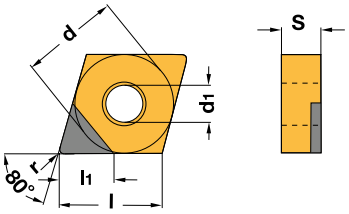

CNGA
Multiple way

uncoated CBN

ANSI	ISO	d	d_1	s	l	l_1	r	Grade availability AH7610	AH7616	AH7620
CNGA 432TN-AM-1	**CNGA 120408TN-AM-1**	12.7	5.5	4.76	12.9	4.0 (1x)	0.4	×	●	×

Custom radii, ICs, edge configurations and grades are available on request.

P			
M			
K			
N			
S			
H	●	●	●

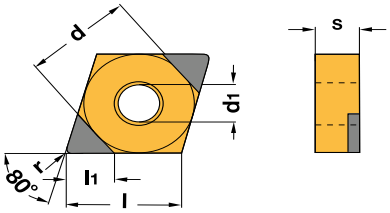

CNGA
One-way

un-/coated CBN

ANSI	ISO	d	d_1	s	l	l_1	r	Grade availability uncoated AH7610	AH7616	AH7620	coated AH8510	AH8516	AH7820
O-CNGA 431TN-AM-1	**O-CNGA 120404TN-AM-1**	12.7	5.2	4.76	12.9	2.5 (1x)	0.4	×	×	×			
O-CNGA 431TN-AM-2	**O-CNGA 120404TN-AM-2**	12.7	5.2	4.76	12.9	2.5 (2x)	0.4	×	●	×	●	●	●
O-CNGA 432TN-AM-1	**O-CNGA 120408TN-AM-1**	12.7	5.2	4.76	12.9	2.5 (1x)	0.8	×	×	×			
O-CNGA 432TN-AM-2	**O-CNGA 120408TN-AM-2**	12.7	5.2	4.76	12.9	2.5 (2x)	0.8	×	●	×	●	●	●
O-CNGA 433TN-AM-2	**O-CNGA 120412TN-AM-2**	12.7	5.2	4.76	12.9	2.5 (2x)	1.2	×	●	×	●	●	●

Custom radii, ICs, edge configurations and grades are available on request.

P						
M						
K						
N						
S						
H	●	●	●	●	●	●

Dimensions in mm

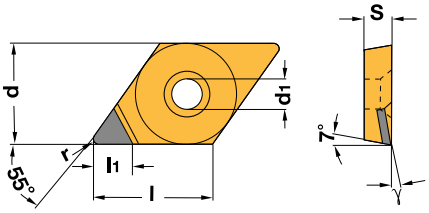

DCGT
Multiple-way

PCD

ANSI	ISO	d	d_1	s	l	l_1	a	r	Grade availability AN8020
DCGT 21.50.5FN-1	DCGT 070202FN-1	6.35	2.8	2.38	7.75	3.0 (1x)	7°	0.2	●
DCGT 21.51FN-1	DCGT 070204FN-1	6.35	2.8	2.38	7.75	3.0 (1x)	7°	0.4	●
DCGT 21.52FN-1	DCGT 070208FN-1	6.35	2.8	2.38	7.75	3.0 (1x)	7°	0.8	●
DCGT 32.50.5FN-1	DCGT 11T302FN-1	9.53	4.4	3.97	11.60	4.0 (1x)	10°	0.2	●
DCGT 32.51FN-1	DCGT 11T304FN-1	9.53	4.4	3.97	11.60	4.0 (1x)	10°	0.4	●
DCGT 32.52FN-1	DCGT 11T308FN-1	9.53	4.4	3.97	11.60	4.0 (1x)	10°	0.8	●

Custom radii, ICs, edge configurations and grades are available on request.

P	
M	
K	
N	●
S	
H	

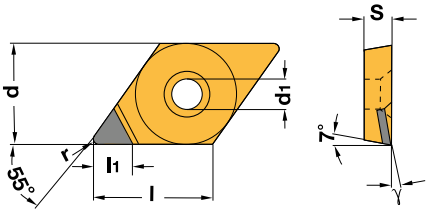

DCGT
Lasered chip breaker
Multiple-way

PCD

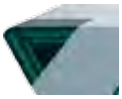

ANSI	ISO	d	d_1	s	l	l_1	a	r	Grade availability AN8020
DCGT 21.50.5FN-PFU-1	DCGT 070202FN-PFU-1	6.35	2.8	2.38	7.75	3.0 (1x)	7°	0.2	●
DCGT 21.51FN-PFU-1	DCGT 070204FN-PFU-1	6.35	2.8	2.38	7.75	3.0 (1x)	7°	0.4	●
DCGT 32.50.5FN-PFU-1	DCGT 11T302FN-PFU-1	9.52	4.4	3.97	11.60	4.0 (1x)	10°	0.2	●
DCGT 32.51FN-PFU-1	DCGT 11T304FN-PFU-1	9.52	4.4	3.97	11.60	4.0 (1x)	10°	0.4	●
DCGT 32.52FN-PFU-1	DCGT 11T308FN-PFU-1	9.52	4.4	3.97	11.60	4.0 (1x)	10°	0.8	●
DCGT 21.50.5FN-PMU-1	DCGT 070202FN-PMU-1	6.35	2.8	2.38	7.75	3.0 (1x)	7°	0.2	×
DCGT 21.51FN-PMU-1	DCGT 070204FN-PMU-1	6.35	2.8	2.38	7.75	3.0 (1x)	7°	0.4	×
DCGT 32.50.5FN-PMU-1	DCGT 11T302FN-PMU-1	9.52	4.4	3.97	11.60	4.0 (1x)	10°	0.2	×
DCGT 32.51FN-PMU-1	DCGT 11T304FN-PMU-1	9.52	4.4	3.97	11.60	4.0 (1x)	10°	0.4	×
DCGT 32.52FN-PMU-1	DCGT 11T308FN-PMU-1	9.52	4.4	3.97	11.60	4.0 (1x)	10°	0.8	×

Custom radii, ICs, edge configurations and grades are available on request.

P	
M	
K	
N	●
S	
H	

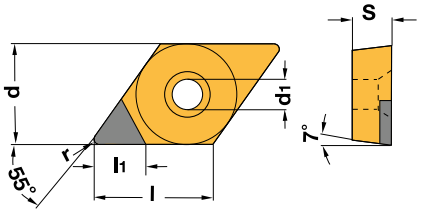

DCGW
Multiple-way

uncoated CBN, PCD

ANSI	ISO	d	d_1	s	l	l_1	r	Grade availability AH7610	AH7616	AN8020
DCGW 21.50.5FN-1	DCGW 070202FN-1	6.35	2.8	2.38	7.75	3.0 (1x)	0.2			●
DCGW 21.50.5TN-AM-1	DCGW 070202TN-AM-1	6.35	2.8	2.38	7.75	3.0 (1x)	0.2		●	
DCGW 21.51FN-1	DCGW 070204FN-1	6.35	2.8	2.38	7.75	3.0 (1x)	0.4			●
DCGW 21.51TN-AM-1	DCGW 070204TN-AM-1	6.35	2.8	2.38	7.75	3.0 (1x)	0.4		●	
DCGW 21.52FN-1	DCGW 070208FN-1	6.35	2.8	2.38	7.75	3.0 (1x)	0.8			●
DCGW 32.50.5FN-1	DCGW 11T302FN-1	9.53	4.4	3.97	11.6	4.0 (1x)	0.2			●
DCGW 32.50.5TN-AM-1	DCGW 11T302TN-AM-1	9.53	4.4	3.97	11.6	4.0 (1x)	0.2	×	●	
DCGW 32.51FN-1	DCGW 11T304FN-1	9.53	4.4	3.97	11.6	4.0 (1x)	0.4			●
DCGW 32.51TN-AM-1	DCGW 11T304TN-AM-1	9.53	4.4	3.97	11.6	4.0 (1x)	0.4	×	●	
DCGW 32.52FN-1	DCGW 11T308FN-1	9.53	4.4	3.97	11.6	4.0 (1x)	0.8			●
DCGW 32.52TN-AM-1	DCGW 11T308TN-AM-1	9.53	4.4	3.97	11.6	4.0 (1x)	0.8	×	●	

Custom radii, ICs, edge configurations and grades are available on request.

P			
M			
K			
N			●
S			
H	●	●	

3

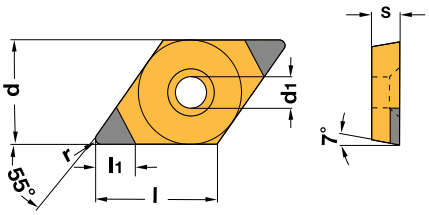

DCGW
One-way

un-/coated CBN

ANSI	ISO	d	d_1	s	l	l_1	r	Grade availability uncoated AH7610	AH7616	AH7620	coated AH7810	AH7816	AH7820
O-DCGW 21.50.5TN-AM-2	O-DCGW 070202TN-AM-2	6.35	2.8	2.38	7.7	2.5 (2x)	0.2	×	●	×	●	●	●
O-DCGW 21.51TN-AM-2	O-DCGW 070204TN-AM-2	6.35	2.8	2.38	7.7	2.5 (2x)	0.4	×	●	×	●	●	●
O-DCGW 32.50.5TN-AM-2	O-DCGW 11T302TN-AM-2	9.52	4.4	3.97	11.6	2.5 (2x)	0.2	×	●	×			
O-DCGW 32.51TN-AM-2	O-DCGW 11T304TN-AM-2	9.52	4.4	3.97	11.6	2.5 (2x)	0.4	×	●	×	●	●	●
O-DCGW 32.52TN-AM-2	O-DCGW 11T308TN-AM-2	9.52	4.4	3.97	11.6	2.5 (2x)	0.8	×	●	×	●	●	●

Custom radii, ICs, edge configurations and grades are available on request.

P							
M							
K							
N							
S							
H	●	●	●	●	●	●	

Dimensions in mm

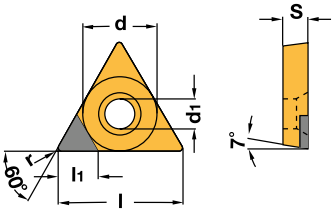

TCGW
Multiple-way

PCD

ANSI	ISO	d	d_1	s	l	l_1	r	Grade availability AN8020
TCGW 1.81.50.5FN-1	TCGW 090202FN-1	5.56	2.5	2.38	9.6	3.0 (1x)	0.2	●
TCGW 1.81.51FN-1	TCGW 090204FN-1	5.56	2.5	2.38	9.6	3.0 (1x)	0.4	●
TCGW 21.50.5FN-1	TCGW 110202FN-1	6.35	2.8	2.38	11	3.0 (1x)	0.2	●
TCGW 21.51FN-1	TCGW 110204FN-1	6.35	2.8	2.38	11	3.0 (1x)	0.4	●
TCGW 32.51FN-1	TCGW 16T304FN-1	9.53	4.4	3.97	16.5	4.0 (1x)	0.4	●
TCGW 32.52FN-1	TCGW 16T308FN-1	9.53	4.4	3.97	16.5	4.0 (1x)	0.8	●

Custom radii, ICs, edge configurations and grades are available on request.

P	
M	
K	
N	●
S	
H	

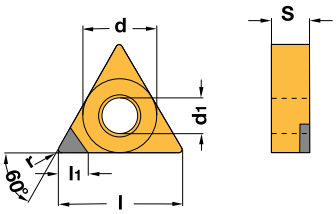

TNGA
One-way

CBN

ANSI	ISO	d	d_1	s	l	l_1	r	Grade availability AH7616
O-TNGA 331TN-AM-3	O-TNGA 160404TN-AM-3	9.53	3.81	4.76	16.5	2.5 (3x)	0.4	●

Custom radii, ICs, edge configurations and grades are available on request.

P	
M	
K	
N	
S	
H	●

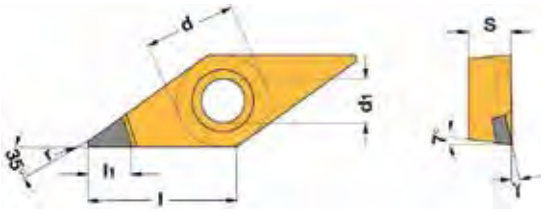

VCGT
Multiple-way

PCD

ANSI	ISO	d	d_1	s	l	l_1	a	r	Grade availability AN8020
VCGT 1.31.50.5FN-1	VCGT 070202FN-1	3.97	2.2	2.38	6.92	3.0 (1x)	7°	0.2	●
VCGT 1.31.51FN-1	VCGT 070204FN-1	3.97	2.2	2.38	6.92	3.0 (1x)	7°	0.4	●
VCGT 220.5FN-1	VCGT 110302FN-1	6.35	2.8	3.18	11.1	3.7 (1x)	10°	0.2	●
VCGT 221FN-1	VCGT 110304FN-1	6.35	2.8	3.18	11.1	3.7 (1x)	10°	0.4	●
VCGT 331FN-1	VCGT 160404FN-1	9.53	4.4	4.76	16.6	4.5 (1x)	10°	0.4	●
VCGT 332FN-1	VCGT 160408FN-1	9.53	4.4	4.76	16.6	4.5 (1x)	10°	0.8	●

Custom radii, ICs, edge configurations and grades are available on request.

P	
M	
K	
N	●
S	
H	

3

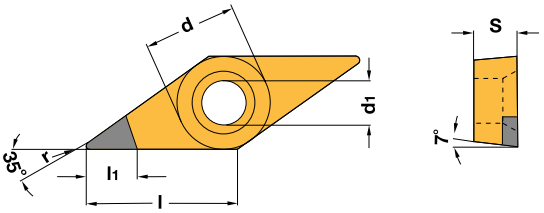

VCGT
Lasered chip breaker
Multiple-way

PCD

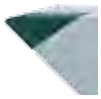

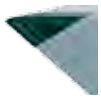

ANSI	ISO	d	d_1	s	l	l_1	r	Grade availability AN8020
VCGT 220.5FN-PFU-1	VCGT 110302FN-PFU-1	6.35	2.8	3.18	11.10	3.7 (1x)	0.2	●
VCGT 221FN-PFU-1	VCGT 110304FN-PFU-1	6.35	2.8	3.18	11.10	3.7 (1x)	0.4	●
VCGT 330.5FN-PFU-1	VCGT 160402FN-PFU-1	9.53	4.4	4.76	16.60	4.5 (1x)	0.2	●
VCGT 331FN-PFU-1	VCGT 160404FN-PFU-1	9.53	4.4	4.76	16.60	4.5 (1x)	0.4	●
VCGT 332FN-PFU-1	VCGT 160408FN-PFU-1	9.53	4.4	4.76	16.60	4.5 (1x)	0.8	●
VCGT 220.5FN-PMU-1	VCGT 110302FN-PMU-1	6.35	2.8	3.18	11.10	3.7 (1x)	0.2	×
VCGT 221FN-PMU-1	VCGT 110304FN-PMU-1	6.35	2.8	3.18	11.10	3.7 (1x)	0.4	×
VCGT 330.5FN-PMU-1	VCGT 160402FN-PMU-1	9.53	4.4	4.76	16.60	4.5 (1x)	0.2	×
VCGT 331FN-PMU-1	VCGT 160404FN-PMU-1	9.53	4.4	4.76	16.60	4.5 (1x)	0.4	×
VCGT 332FN-PMU-1	VCGT 160408FN-PMU-1	9.53	4.4	4.76	16.60	4.5 (1x)	0.8	×
VCGT 333FN-PMU-1	VCGT 160412FN-PMU-1	9.53	4.4	4.76	16.60	4.5 (1x)	1.2	×

Custom radii, ICs, edge configurations and grades are available on request.

P	
M	
K	
N	●
S	
H	

Dimensions in mm

VCGW
Multiple-way

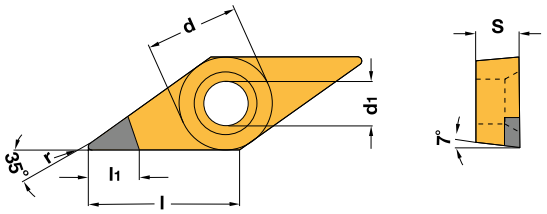

uncoated CBN, PCD

ANSI	ISO	d	d_1	s	l	l_1	r	Grade availability AH7610	AH7616	AN8020
VCGW 1.31.50.5FN-1	VCGW 070202FN-1	3.97	2.2	2.38	6.92	3.0 (1x)	0.2			●
VCGW 220.5FN-1	VCGW 110302FN-1	6.35	2.8	3.18	11.1	3.7 (1x)	0.2			●
VCGW 220.5TN-AM-1	VCGW 110302TN-AM-1	6.35	2.8	3.18	11.1	3.7 (1x)	0.2		●	
VCGW 221FN-1	VCGW 110304FN-1	6.35	2.8	3.18	11.1	3.7 (1x)	0.4			●
VCGW 221TN-AM-1	VCGW 110304TN-AM-1	6.35	2.8	3.18	11.1	3.7 (1x)	0.4	×	●	
VCGW 222FN-1	VCGW 110308FN-1	6.35	2.8	3.18	11.1	3.7 (1x)	0.8			●
VCGW 330.5FN-1	VCGW 160402FN-1	9.53	4.4	4.76	16.6	4.5 (1x)	0.2			●
VCGW 331FN-1	VCGW 160404FN-1	9.53	4.4	4.76	16.6	4.5 (1x)	0.4			●
VCGW 331TN-AM-1	VCGW 160404TN-AM-1	9.53	4.4	4.76	16.6	4.5 (1x)	0.4		●	
VCGW 332FN-1	VCGW 160408FN-1	9.53	4.4	4.76	16.6	4.5 (1x)	0.8			●
VCGW 332TN-AM-1	VCGW 160408TN-AM-1	9.53	4.4	4.76	16.6	4.5 (1x)	0.8		●	
VCGW 333FN-1	VCGW 160412FN-1	9.53	4.4	4.76	16.6	4.5 (1x)	1.2			●

Custom radii, ICs, edge configurations and grades are available on request.

P			
M			
K			
N			●
S			
H	●	●	

3

Dimensions in mm

VCGW
One-way

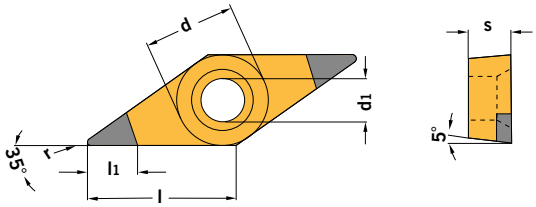

un-/coated CBN

ANSI	ISO	d	d_1	s	l	l_1	r	Grade availability: uncoated AH7610	uncoated AH7616	uncoated AH7620	coated AH7810	coated AH7816	coated AH7820
O-VCGW 220.5TN-AM-2	**O-VCGW 110302TN-AM-2**	6.35	2.8	3.18	11.1	3.0 (2x)	0.2	×	●	×	●	●	●
O-VCGW 221TN-AM-2	**O-VCGW 110304TN-AM-2**	6.35	2.8	3.18	11.1	3.0 (2x)	0.4	×	●	×	●	●	●
O-VCGW 330.5TN-AM-2	**O-VCGW 160402TN-AM-2**	9.53	4.4	4.76	16.6	3.0 (2x)	0.2	×	●	×			
O-VCGW 331TN-AM-2	**O-VCGW 160404TN-AM-2**	9.53	4.4	4.76	16.6	3.0 (2x)	0.4	×	●	×	●	●	●
O-VCGW 332TN-AM-2	**O-VCGW 160408TN-AM-2**	9.53	4.4	4.76	16.6	3.0 (2x)	0.8	×	●	×	●	●	●

Custom radii, ICs, edge configurations and grades are available on request.

P						
M						
K						
N						
S						
H	●	●	●	●	●	●

3

Dimensions in mm

VNGA
Multiple-way

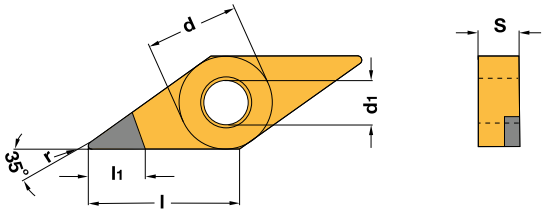

uncoated CBN

ANSI	ISO	d	d_1	s	l	l_1	r	Grade availability AH7616
VNGA 330.5TN-AM-1	VNGA 160402TN-AM-1	9.53	3.81	4.76	16.6	4.5 (1x)	0.2	●

Custom radii, ICs, edge configurations and grades are available on request.

P	
M	
K	
N	
S	
H	●

VNGA
One-way

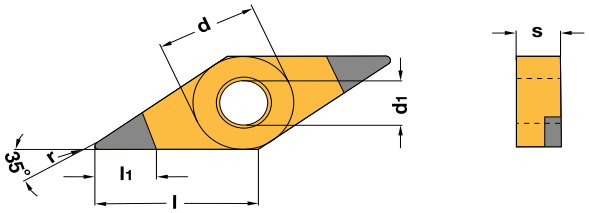

coated CBN

ANSI	ISO	d	d_1	s	l	l_1	r	Grade availability coated AH7810	AH7816	AH7820
O-VNGA 160402TN-AM-2	O-VNGA 160402TN-AM-2	9.53	3.8	4.76	16.6	3.0 (2x)	0.2	●	●	●
O-VNGA 160404TN-AM-2	O-VNGA 160404TN-AM-2	9.53	3.8	4.76	16.6	3.0 (2x)	0.4	●	●	●
O-VNGA 160408TN-AM-2	O-VNGA 160408TN-AM-2	9.53	3.8	4.76	16.6	3.0 (2x)	0.8	●	●	●

Custom radii, ICs, edge configurations and grades are available on request.

P			
M			
K			
N			
S			
H	●	●	●

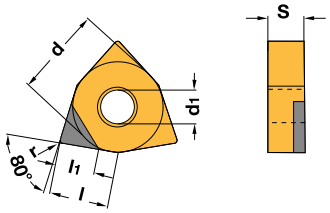

WNGA
One-way

uncoated CBN

ANSI	ISO	d	d_1	s	l	l_1	r	AH7616
O-WNGA 432TN-AM-3	**O-WNGA 080408TN-AM-3**	12.7	5.13	4.76	8.5	4.0 (3x)	0.8	●

Custom radii, ICs, edge configurations and grades are available on request.

P	
M	
K	
N	
S	
H	●

3

Dimensions in mm

DECO-Cut for CNC Auto Lathes

- Overview 242 – 243
- Holders and Spare Parts 244 – 247/262
- Indexable Inserts 248 – 263
- Application Reference 264 – 265

4

Auto Lathe Tool Holders DECO-Cut – Turning operations

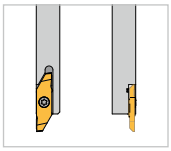

SLAO R/L

Page 244

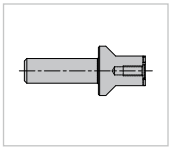

SLCO N

Page 245

Auto Lathe Tool Holders DECO-Cut – Parting off

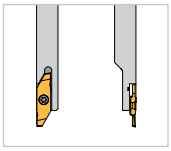

SLXO R

Page 246

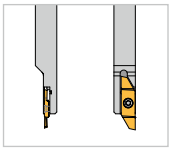

SLXO L

Page 247

Auto Lathe Tool Holders ISO – Insert VCGT

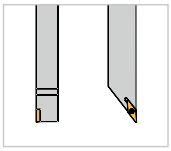

SVAC R/L

Page 262

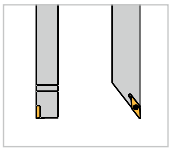

SVJC R/L

Page 262

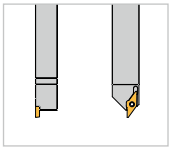

SV91C R/L

Page 262

4

Accuracy and Performance!

- Double sided inserts
- Due to V-shaped insert pocket with 3-point location a very strong insert location is achieved with highest repeatability in insert length and height.
- Quick insert changes due to centrally located screw
- Geometries specially developed for swiss style auto lathes
- Fine grain carbide with or without high performance PVD coatings
- Ground shanks on all toolholders

Indexable inserts
– Parting off

LAB

Page 248-251

Indexable inserts
– Grooving
– Turning

LST

Page 252-253

Indexable inserts
– Front turning

LVD

Page 254-255

Indexable inserts
– Threading
full / partial profile

LGE

Page 256-257

Indexable inserts
– Back turning

LRD

Page 258-260

Indexable inserts
– Insert blank

LRO

Page 261

ISO Indexable inserts
– Geometry -PF2

VCGT

Page 263

SLAO R/L

Standard holder with square shank

- For turning, grooving and threading

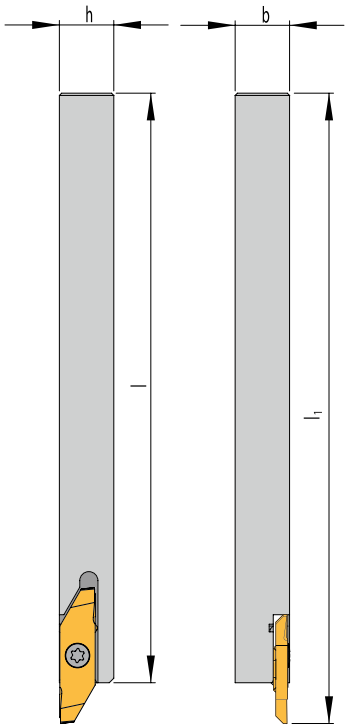

Right hand execution shown

Holder

Designation	h	b	l	l_1	PG	Indexable insert
SLAO R/L 0808 X08-115	8	8	115	124	39	**L.. 08..**
SLAO R/L 1010 X08-115	10	10	115	124	39	**L.. 08..**
SLAO R/L 1212 X08-90	12	12	91,5	100,5	39	**L.. 08..**
SLAO R/L 1212 X08-130	12	12	130	139	39	**L.. 08..**
SLAO R/L 1313 X08-130	13	13	130	139	39	**L.. 08..**
SLAO R/L 1616 X08-75	16	16	75	84	39	**L.. 08..**
SLAO R/L 1616 X08-130	16	16	130	139	39	**L.. 08..**
SLAO R/L 2020 X08-120	20	20	120	129	39	**L.. 08..**

Spare parts

For holder	Screw	Key
SLAO R/L 0808..	AS 0027	KS 1111
SLAO R/L 1010.. - 2020..	AS 0028	KS 1111

SLCO N

Turning holder with round shank

- For turning, grooving and threading
- For mounting on drilling stations on main and counter spindle
- Suitable for left and right handed inserts

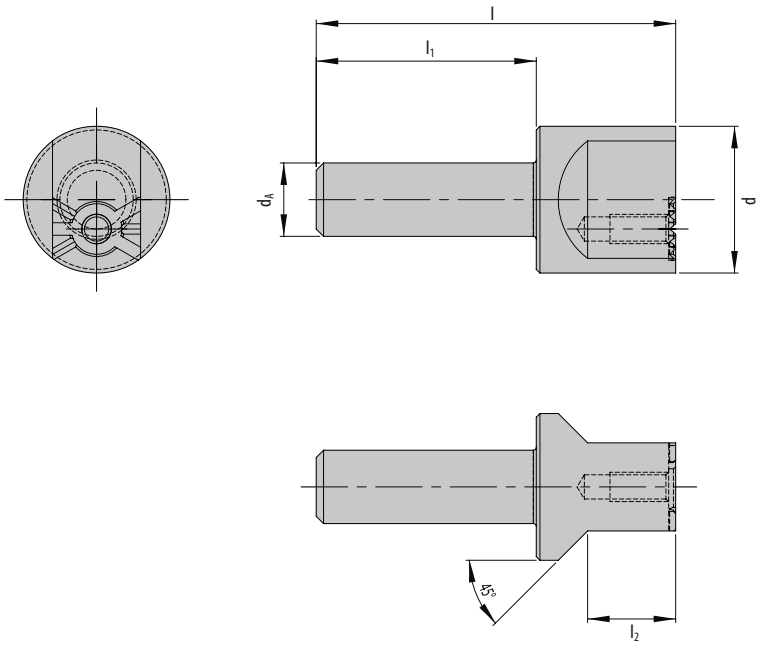

Holder

Designation	l	l_1	l_2	d_A	d	PG	Indexable insert
SLCON 10 X08	49	30	12	10	20	**39**	**L.. 08..**

Spare parts

For holder	Screw	Key
SLCON 10 X08	AS 0028	KS 1111

Remark: More diameters available on request

4

SLXO R

Slim holder with offset insert pocket and square shank

- For parting off short work pieces on machines with subspindle
- Parting off close to main spindle results in stable chucking of the work piece, even in small diameters

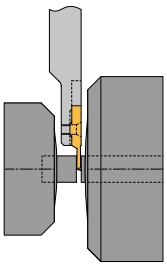

For use with insert: LAB 082085FR-L

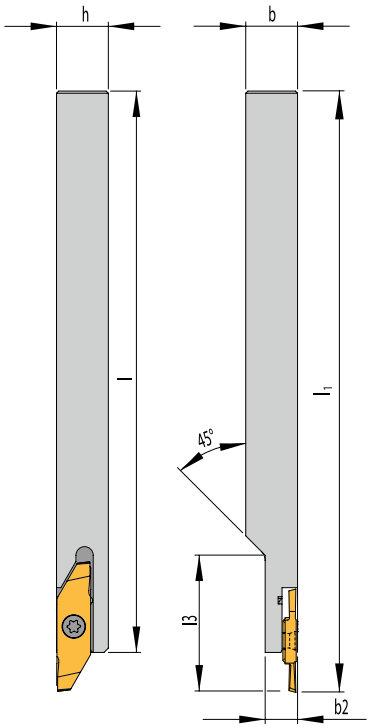

Right hand execution shown

Holder

Designation	h	b	b_2	l	l_1	l_3	PG	Indexable insert
SLXOR 1212 X08-130	12	12	7,5	130	139	30	**39**	**L.. 08..**

Spare parts

For holder	Screw	Key
SLXOR 1212 X08-130	AS 0029	KS 1111

4

SLXO L

Slim holder with offset insert pocket and square shank

- For easier insert changes without removing the holder
- Note the distance to guide bush

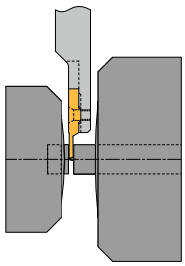

For use with insert: LAB 08.. FL-R

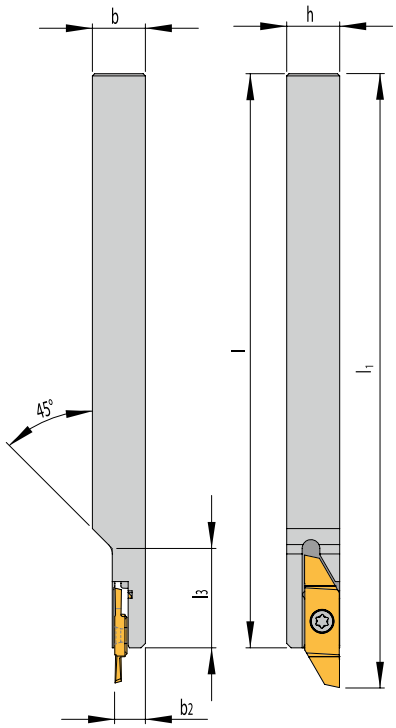

Left hand execution shown

Holder

Designation	h	b	b_2	l	l_1	l_3	PG	Indexable insert
SLXOL 1212 X08-130	12	12	7,5	130	139	30	39	**L.. 08..**
SLXOL 1616 X08-130	16	16	7,5	130	139	40	39	**L.. 08..**

Spare parts

For holder	Screw	Key
SLXOL.. X08-130	AS 0029	KS 1111

LAB

Parting off with 0° rake angle

- For machining steels and alloy steels
- Parting off small diameters
- Regrindable
- Fits all holders

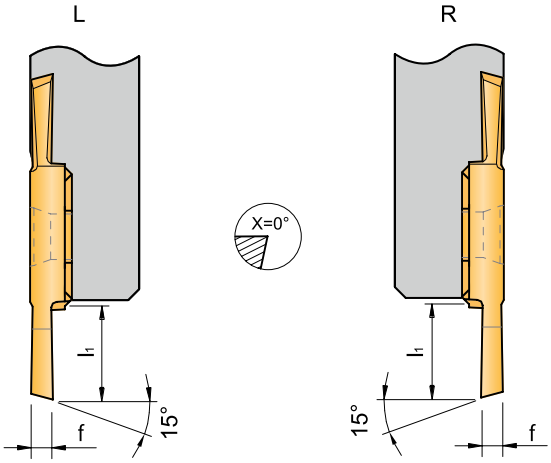

Indexable inserts

Designation	f	l_1	PG	AP4020	AP5020	AK1020
LAB 080804FL	0,8	4,0	35	X	X	X
LAB 080804FR	0,8	4,0	35	X	X	X
LAB 081005FL	1,0	5,0	35	X	X	X
LAB 081005FR	1,0	5,0	35	X	X	X
LAB 081205FL	1,2	5,0	35	X	X	X
LAB 081205FR	1,2	5,0	35	X	X	X
LAB 081507FL	1,5	7,0	35	X	X	X
LAB 081507FR	1,5	7,0	35	X	X	X
LAB 082085FL	2,0	8,5	35	X	X	X
LAB 082085FR	2,0	8,5	35	X	X	X
LAB 082585FL	2,5	8,5	35	X	X	X
LAB 082585FR	2,5	8,5	35	X	X	X

X Available grade
● Main application
○ 2nd application

P	○	●	
M		●	
K			
N	●		●
S		●	●
H			

4

Dimensions in mm

LAB

Parting off with 4° rake angle

- For parting off exotic materials which require a softer cutting geometry
- Fits all holders

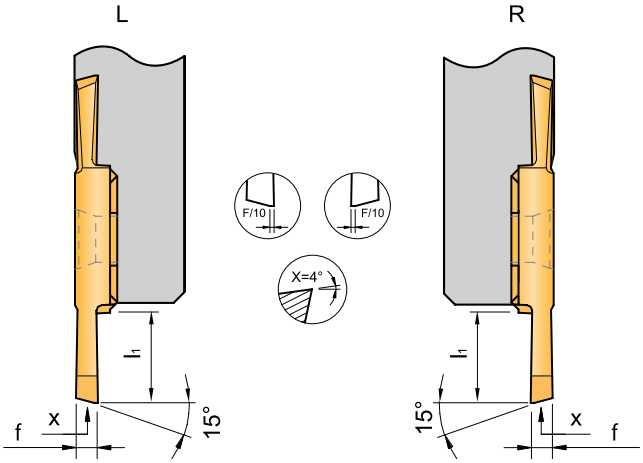

Indexable inserts

Designation	f	l_1	PG	AP4020	AP5020	AK1020
LAB 081507FL-PF	1,5	7,0	35	X	X	X
LAB 081507FR-PF	1,5	7,0	35	X	X	X
LAB 082085FL-PF	2,0	8,5	35	X	X	X
LAB 082085FR-PF	2,0	8,5	35	X	X	X

Remark: Cutting edge 0,4mm below center, offset needs to be programmed in machine.

X Available grade
● Main application
○ 2nd application

	AP4020	AP5020	AK1020
P	○	●	
M		●	
K			
N	●		●
S		●	●
H			

4

LAB

Parting off left/right and right/left offline with 0° rake angle

- For machining steel and alloy steel
- Parting off small diameters close to sub spindle
- For use with SLXO..- holders

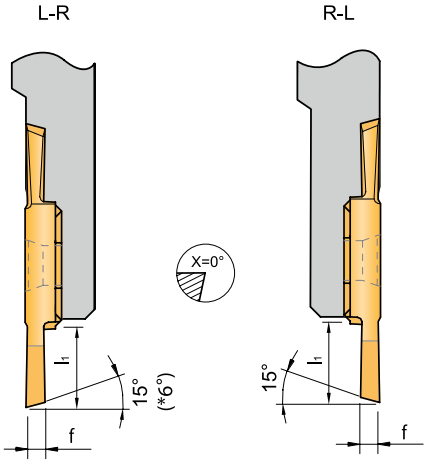

Indexable inserts

Designation	f	l_1	PG	AP4020	AP5020	AK1020
LAB 081507FL-R	1,5	7,0	35	X	X	X
LAB 081585FL-R-6 *	1,5	8,5	35			X
LAB 082085FL-R	2,0	8,5	35	X	X	X
LAB 082085FR-L	2,0	8,5	35	X	X	X

* = with 6° grind (instead of 15°)

X Available grade
● Main application
○ 2nd application

	AP4020	AP5020	AK1020
P	○	●	
M		●	
K			
N	●		●
S		●	●
H			

4

Dimensions in mm

LAB

Parting off left/right offline with 4° rake angle

- For parting off exotic materials which require a softer cutting geometry
- Parting off close to sub spindle
- For use with SLXOL..- holders

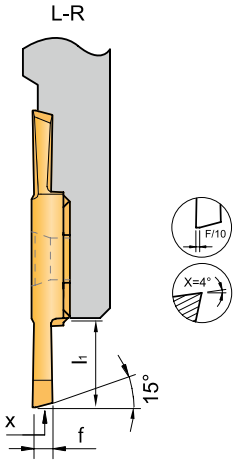

Indexable inserts

Designation	f	l_1	PG	AP4020	AP5020	AK1020
LAB 081507FL-R-PF	1,5	7,0	35	X	X	X
LAB 082085FL-R-PF	2,0	8,5	35	X	X	X

Remark: Cutting edge 0,4mm below center, offset needs to be programmed in machine.

X Available grade
● Main application
○ 2nd application

	AP4020	AP5020	AK1020
P	○	●	
M		●	
K			
N	●		●
S		●	●
H			

4

LST

Grooving insert with 0° rake angle

- For grooving and turning of small work piece diameters

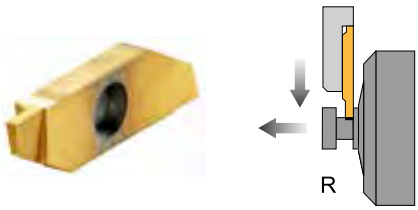

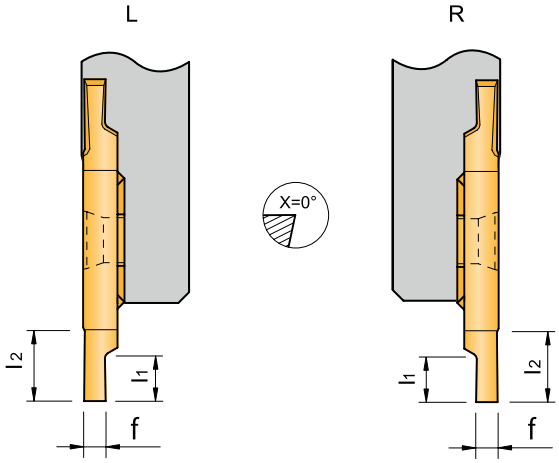

Indexable inserts

Designation	f	l_1	l_2	PG	AP4020	AP5020	AK1020
LST 080802FL	0,8	2,0	4,0	35	X	X	X
LST 080802FR	0,8	2,0	4,0	35	X	X	X
LST 081025FL	1,0	2,5	4,0	35	X	X	X
LST 081025FR	1,0	2,5	4,0	35	X	X	X
LST 081230FL	1,2	3,0	4,0	35	X	X	X
LST 081230FR	1,2	3,0	4,0	35	X	X	X
LST 081530FL	1,5	3,0	4,0	35	X	X	X
LST 081530FR	1,5	3,0	4,0	35	X	X	X
LST 082040FL	2,0	4,0	6,5	35	X	X	X
LST 082040FR	2,0	4,0	6,5	35	X	X	X
LST 082560FL	2,5	6,0	6,5	35	X	X	X
LST 082560FR	2,5	6,0	6,5	35	X	X	X
LST 083065FL	3,0	6,5	6,5	35	X	X	X
LST 083065FR	3,0	6,5	6,5	35	X	X	X

X Available grade
● Main application
○ 2nd application

P	○	●	
M		●	
K			
N	●		●
S		●	●
H			

4

Dimensions in mm

LST

Grooving inserts with 2 ground chip breakers

- For grooving and turning of exotic materials (e.g. titanium alloys) as well as stainless steel
- Both main edges are on the same height and have a 10° rake angle

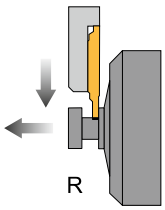

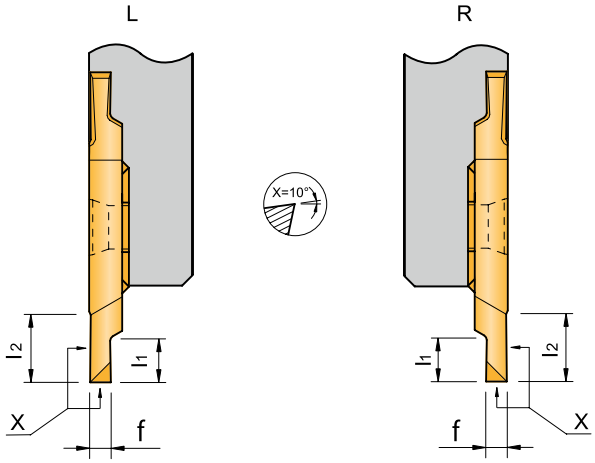

Indexable inserts

Designation	f	l_1	l_2	PG	AP4020	AP5020	AK1020
LST 081025FL-P	1,0	2,5	4,0	35	X	X	X
LST 081025FR-P	1,0	2,5	4,0	35	X	X	X
LST 081230FL-P	1,2	3,0	4,0	35	X	X	X
LST 081230FR-P	1,2	3,0	4,0	35	X	X	X
LST 081530FL-P	1,5	3,0	4,0	35	X	X	X
LST 081530FR-P	1,5	3,0	4,0	35	X	X	X
LST 082040FL-P	2,0	4,0	6,5	35	X	X	X
LST 082040FR-P	2,0	4,0	6,5	35	X	X	X
LST 082560FL-P	2,5	6,0	6,5	35	X	X	X
LST 082560FR-P	2,5	6,0	6,5	35	X	X	X
LST 083065FL-P	3,0	6,5	6,5	35	X	X	X
LST 083065FR-P	3,0	6,5	6,5	35	X	X	X

X Available grade
● Main application
○ 2nd application

P	○	●	
M		●	
K			
N	●		●
S		●	●
H			

4

Dimensions in mm

LVD

Front turning insert with 0° rake angle

- For turning small diameters
- 90° or 92° approach angle

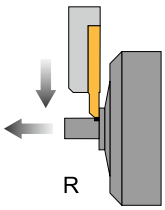

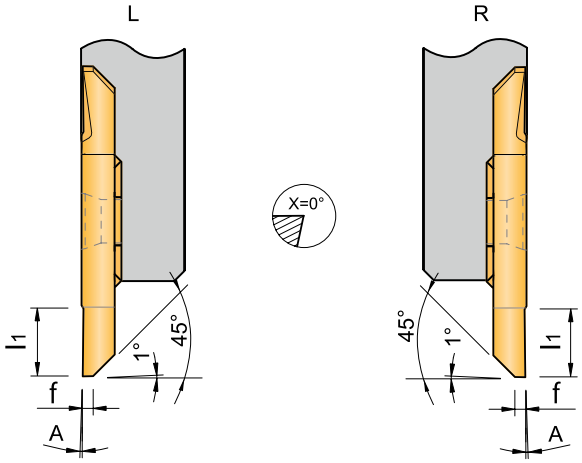

Indexable inserts

Designation	f	l_1	A	PG	AP4020	AP5020	AK1020
LVD 08-0FL	1,0	6,5	0°	35	X	X	X
LVD 08-0FR	1,0	6,5	0°	35	X	X	X
LVD 08-2FL	1,0	6,5	2°	35	X	X	X
LVD 08-2FR	1,0	6,5	2°	35	X	X	X

X Available grade
● Main application
○ 2nd application

P	○	●	
M		●	
K			
N	●		●
S		●	●
H			

4

Dimensions in mm

LVD

- **Front turning inserts with 2 ground chip breakers of 10°**
- For exotic materials (e.g. titanium alloys) as well as stainless steel
- 90° or 92° approach angle

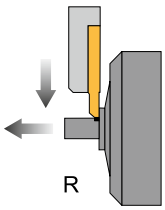

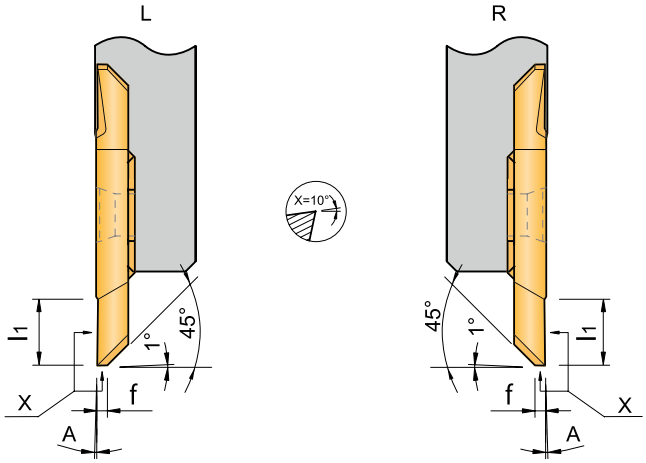

Indexable inserts

Designation	f	l_1	A	PG	AP4020	AP5020	AK1020
LVD 08-0FL-P	1,0	6,5	0°	35	X	X	X
LVD 08-0FR-P	1,0	6,5	0°	35	X	X	X
LVD 08-2FL-P	1,0	6,5	2°	35	X	X	X
LVD 08-2FR-P	1,0	6,5	2°	35	X	X	X

Cutting edge information available in info section.

X Available grade
● Main application
○ 2nd application

P	○	●	
M		●	
K			
N	●		●
S		●	●
H			

4

LGE

Threading partial profile 60° and 55°

- For left and right hand threading up to 3° pitch angle
- for all common threads matric, UN, inch
- Left hand holder for right hand threads: More stability for longer threads since bar stays in guide bush (see picture L)

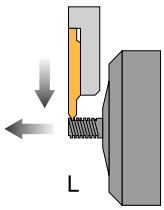

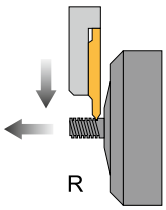

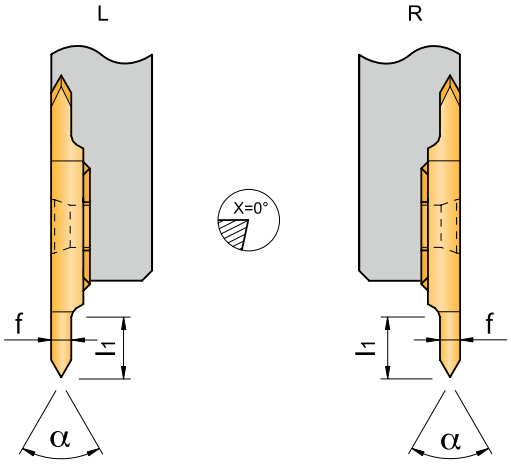

Indexable inserts

Designation	f	l_1	α	PG	AP4020	AP5020	AK1020
LGE 08-55FR	2,0	6,0	55°	35	X	X	
LGE 08-60FL	2,0	6,0	60°	35	X	X	X
LGE 08-60FR	2,0	6,0	60°	35	X	X	X

Remark: More threads available on request.

X Available grade
● Main application
○ 2nd application

	AP4020	AP5020	AK1020
P	○	●	
M		●	
K			
N	●		●
S		●	●
H			

4

Dimensions in mm

LGE

Threading full profile 60°

- For left and right hand threading up to 3° pitch angle
- For metric threads from 0,4 to 1,0mm pitch
- Left hand holder for right hand threads: More stability for longer threads since bar stays in guide bush (see picture L)

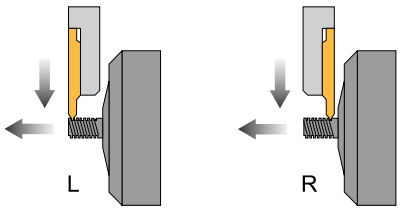

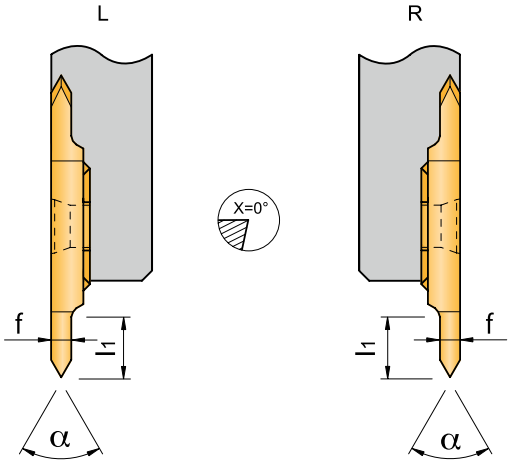

Indexable inserts

Designation	f	l_1	α	Steigung	PG	AP5020	AK1020
LGE 08-M0.40FL	1,0	3,0	60°	0,40	35	X	X
LGE 08-M0.40FR	1,0	3,0	60°	0,40	35	X	X
LGE 08-M0.50FL	1,0	3,0	60°	0,50	35	X	X
LGE 08-M0.50FR	1,0	3,0	60°	0,50	35	X	X
LGE 08-M0.70FL	1,0	3,0	60°	0,70	35	X	X
LGE 08-M0.70FR	1,0	3,0	60°	0,70	35	X	X
LGE 08-M0.75FL	1,0	3,0	60°	0,75	35	X	X
LGE 08-M0.75FR	1,0	3,0	60°	0,75	35	X	X
LGE 08-M0.80FL	1,5	4,5	60°	0,80	35	X	X
LGE 08-M0.80FR	1,5	4,5	60°	0,80	35	X	X
LGE 08-M1.00FL	1,5	4,5	60°	1,00	35	X	X
LGE 08-M1.00FR	1,5	4,5	60°	1,00	35	X	X

X Available grade
● Main application
○ 2nd application

P	●	
M	●	
K		
N		●
S	●	●
H		

4

Dimensions in mm

LRD

Back turning inserts with 0° rake angle

- For machining small diameters
- Approach angle of 70°

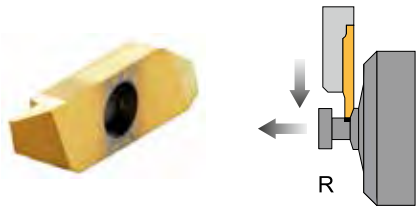

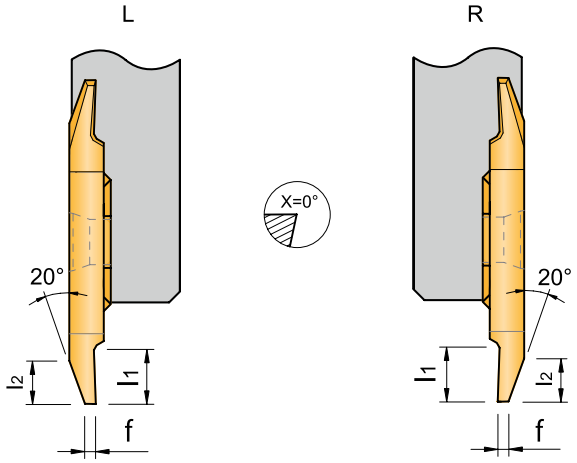

Indexable inserts

Designation	f	l_1	l_2	PG	AP4020	AP5020	AK1020
LRD 080504FL	0,5	4,0	4,0	35	X	X	X
LRD 080504FR	0,5	4,0	4,0	35	X	X	X
LRD 081050FL	1,0	5,0	4,0	35	X	X	X
LRD 081050FR	1,0	5,0	4,0	35	X	X	X

X Available grade
● Main application
○ 2nd application

P	○	●	
M		●	
K			
N	●		●
S		●	●
H			

4

Dimensions in mm

LRD

• Back turning inserts with 2 ground chip breakers of 10°

- For turning exotic materials and stainless steel
- The „X“ is exactly on center
- Approach angle 70°

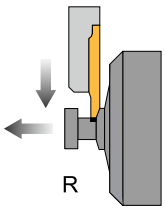

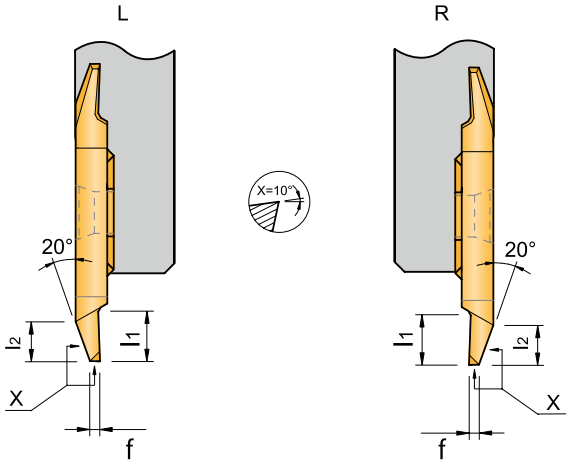

Indexable inserts

Designation	f	l_1	l_2	PG	AP4020	AP5020	AK1020
LRD 081050FL-P	1,0	5,0	4,0	35	X	X	X
LRD 081050FR-P	1,0	5,0	4,0	35	X	X	X

X Available grade
● Main application
○ 2nd application

P	○	●	
M		●	
K			
N	●		●
S		●	●
H			

4

Dimensions in mm

LRD

Back turning inserts with 8° rake angle

- For turning exotic materials and stainless steel
- Approach angle of 55° for alternative chip evacuation

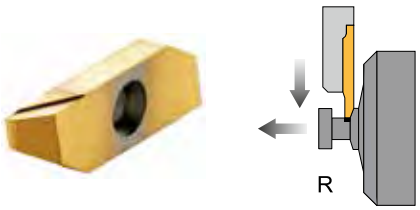

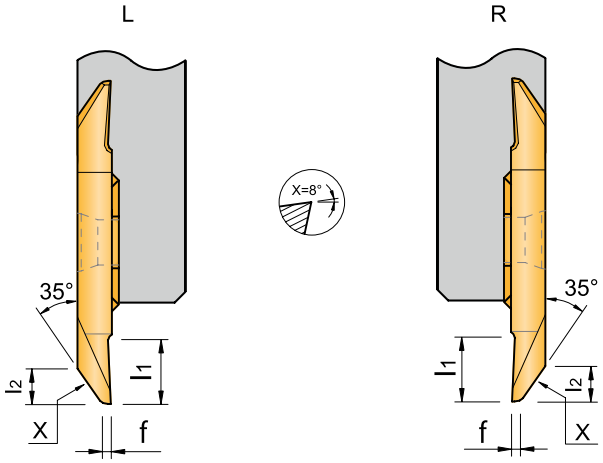

Indexable inserts

Designation	f	l_1	l_2	PG	AP4020	AP5020	AK1020
LRD 081060FL-SP	1,0	6,0	3,0	35	X	X	X
LRD 081060FR-SP	1,0	6,0	3,0	35	X	X	X

Remark: Cutting edge 0,2mm below center, offset needs to be programmed in machine.

X Available grade
● Main application
○ 2nd application

P	○	●	
M		●	
K			
N	●		●
S		●	●
H			

4

Dimensions in mm

LRO

Blank for special applications

- Chip breaker polished

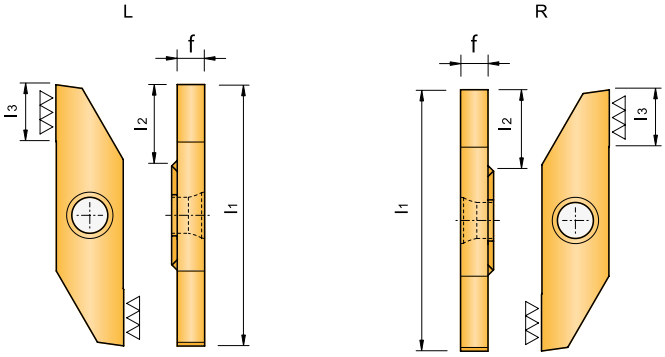

Indexable inserts

Designation	f	l_1	l_2	l_3	PG	AP4020	AP5020	AK1020
LRO 08FL	~3,2	~30,5	~9,2	~6,5	35	X	X	X
LRO 08FR	~3,2	~30,5	~9,2	~6,5	35	X	X	X

X Available grade
● Main application
○ 2nd application

	AP4020	AP5020	AK1020
P	○	●	
M		●	
K			
N	●		●
S		●	●
H			

4

SVAC R/L Approach angle: 90°

CNC Auto Lathes

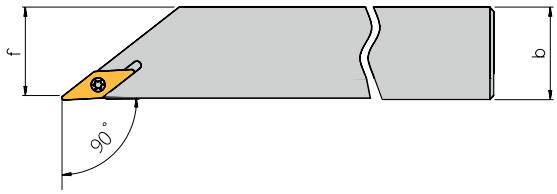

Right hand execution shown

Holders

Designation	h_1 / h_2	b	l	f = b	PG	Indexable insert
SVAC R/L 0808 X11-A	8	8	115	8	39	VC.. 1103...
SVAC R/L 1010 X11-A	10	10	115	10	39	VC.. 1103...
SVAC R/L 1212 X11-A	12	12	130	12	39	VC.. 1103...
SVAC R/L 1616 X11-A	16	16	130	16	39	VC.. 1103...

SVJC R/L Approach angle: 93°

CNC Auto Lathes

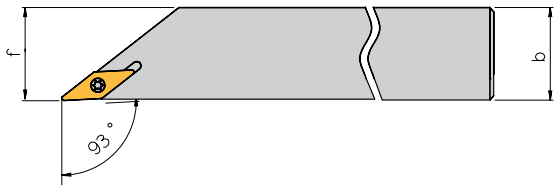

Right hand execution shown

Holders

Designation	h_1 / h_2	b	l	f = b	PG	Indexable insert
SVJC R/L 0808 X11-A	8	8	115	8	39	VC.. 1103...
SVJC R/L 1010 X11-A	10	10	115	10	39	VC.. 1103...
SVJC R/L 1212 X11-A	12	12	130	12	39	VC.. 1103...
SVJC R/L 1616 X11-A	16	16	130	16	39	VC.. 1103...

4

SV91C R/L for back turning

CNC Auto Lathes

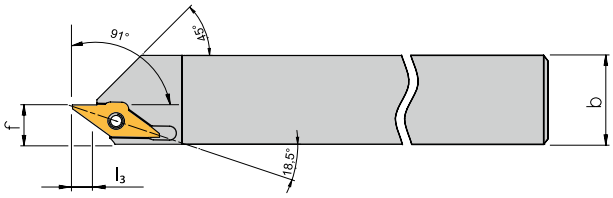

Right hand execution shown

Holders

Designation	h_1 / h_2	b	l	l_2	f	PG	Indexable insert
SV91C R/L 1212 X11-A	12	12	130	5	7,5	39	VCG.. 1103...
SV91C R/L 1616 X11-A	16	16	130	5	7,5	39	VCG.. 1103...
SV91C R/L 2020 X11-A	20	20	120	5	7,5	39	VCG.. 1103...

Attention: Right hand holder → Left hand insert
Left hand holder → Right hand insert

Remark: More tool holders for CNC auto lathes can be found in chapters 1 and 2.

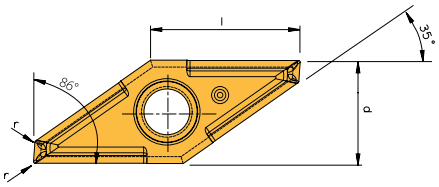

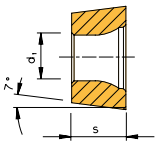

VCGT

Designation	l	d	s	d_1	r	PG	Grade availability: Coated AM5015	Uncoated AK1010	Uncoated AK1020
VCGT 1103003FL-PF2	11,10	6,350	3,18	2,8	0,03	3	X	X	X
VCGT 1103003FR-PF2	11,10	6,350	3,18	2,8	0,03	3	X	X	X
VCGT 1103008FL-PF2	11,10	6,350	3,18	2,8	0,08	3	X	X	X
VCGT 1103008FR-PF2	11,10	6,350	3,18	2,8	0,08	3	X	X	X
VCGT 110301FL-PF2	11,10	6,350	3,18	2,8	0,1	3	X	X	X
VCGT 110301FR-PF2	11,10	6,350	3,18	2,8	0,1	3	X	X	X
VCGT 110302FL-PF2	11,10	6,350	3,18	2,8	0,2	3	X	X	X
VCGT 110302FR-PF2	11,10	6,350	3,18	2,8	0,2	3	X	X	X

X Available grade
● Main application
○ 2nd application

	Coated AM5015	Uncoated AK1010	Uncoated AK1020
P	●		
M	●		
K	○	○	○
N		●	●
S	●		
H	○		

Holders – Turning Operations

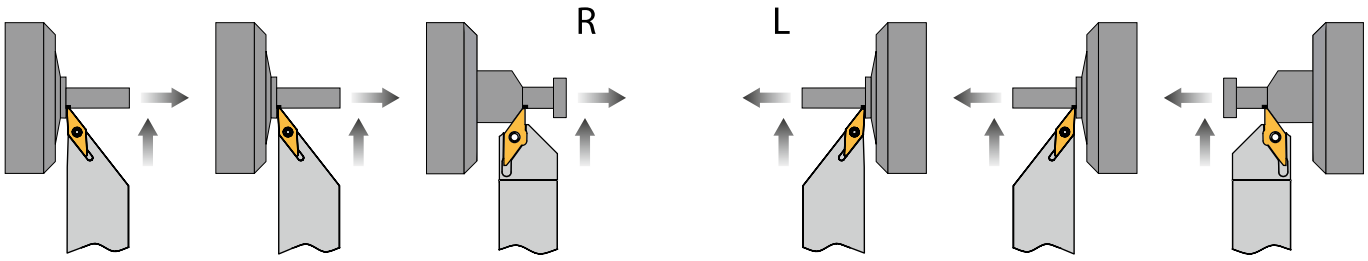

Right hand holder – Left hand insert

Left hand holder – Right hand insert

4

UNIVERSAL GEOMETRY FOR MACHINING ALL MATERIALS

Due to the ground and polished surface this grade is most suitable for finishing applications. The very sharp cutting edge and the 10° positive rake angle guarantee an optimum machining and controlled chip breaking. Fine grain carbide mit corner radiuses starting at 0,02 mm, feed rate 0,01 – 0,1mm/rev. The inserts is available in left and right hand execution.

Grade – coated

AM5015

HC–P15, HC–M15, HC–K15, HC–N15, HC–S15
PVD-Multi layer coating, substrate + TiAlN
Wear resistant grade for machining steel, cast steel, stainless steel and high temperature alloys (super alloys).

Grades – uncoated

AK1010

Carbide grade for machining of all cast materials, aluminium and aluminium alloys, copper and copper alloys, bronze and brass as well as refractory metals at medium chip cross sections and under favourable cutting conditions.

AK1020

Ideal grade for finishing of nonferrous materials such as aluminum (and aluminum alloys) copper (and alloys), bronze, brass and non-metalic materials with a smooth cut or light varying cutting depths.

Dimensions in mm

Grades – coated

AP4020

PVD-coating, substrate +TiN
Universal grade for light machining of nonferrous materials (copper and copper alloys, bronze and brass) as well as aluminum and aluminum alloys at low cutting speed. Very suitable for machining soft materials with a tendency to create a build up edge. Also suitable for machining small diameter components in free cutting steel.
Very low co-efficiency.

AP5020

PVD-multi layer coating, substrate + TiAlN
Suitable for general steel cutting, but also suitable for machining stainless steel, high temperature alloys as well as titanium alloys.
Very good heat resistance.

Grade – uncoated

AK1020

Wear resistant fine grain carbide.
Suitable for machining aluminum, aluminum alloys and exotic materials (titanium).
Base grade for customer specific coating solutions.

Recommended cutting data

ISO	Material		Cutting speed			
			Turning		Parting off	
			V_c [m/min]	f [mm/rev]	V_c [m/min]	f [mm/rev]
P	Free cutting steel		120 - 200	0,01 - 0,20	80 - 150	0,01 - 0,15
	Steel	< 600 N/mm²	80 - 160	0,01 - 0,18	70 - 120	0,01 - 0,12
	Steel	< 800 N/mm²	60 - 120	0,01 - 0,15	60 - 100	0,01 - 0,10
	Steel	> 800 N/mm²	50 - 100	0,01 - 0,12	40 - 80	0,01 - 0,08
M	Stainless steel		60 - 120	0,01 - 0,15	60 - 100	0,01 - 0,08
N	Aluminum and aluminum alloys		180 - 800	0,01 - 0,30	150 - 300	0,01 - 0,20
	Copper and copper alloys (brass, bronze)		100 - 500	0,01 - 0,30	100 - 300	0,01 - 0,20
S	Titanium		30 - 70	0,01 - 0,12	30 - 50	0,01 - 0,06

Corner radius

When there is no radius callout shown, the corner radius of the insert is R 0,0 mm. The inserts achieve the excellent surface finish with a wiper edge effect.

Clearance angle

The clearance angle in the main cutting direction on all inserts is 7°, the clearance angle for the secondary edge is 3°. Due to this fact the usage of the secondary cutting direction is limited.

Location of the indexable insert

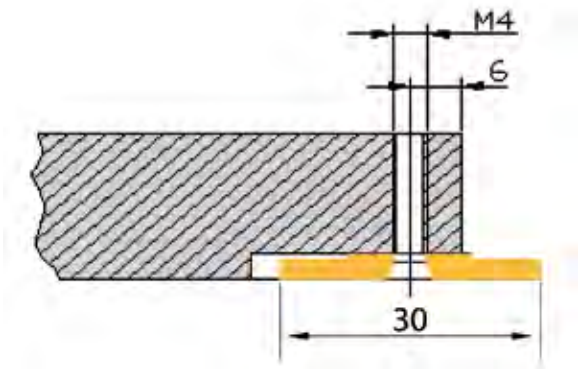

Calculation of the helix angle for thread turning

The helix angle of the thread and the required inclination angle can be calculated by the following formula:

$$\tan \lambda = \frac{p}{d_2 \times \pi}$$

λ = Inclination
d_2 = Pitch diameter
p = Pitch

Remark: Illustrations in the catalog show the main spindle on the right hand side (Machines: Tornos, Maier, etc.)
For further technical information please refer to the info section in the back of this book.

ARNO®
WERKZEUGE

Order Hotline: 800-943-4426

Monday - Friday: 8AM to 5PM Central Time

Information

- Material - Cross Reference 268 – 272
- Insert Wear and Solutions 273 – 274
- Application Reference 274 – 277
- Recommended Cutting Data 278 – 285

ISO	W-Nr.	Germany – DIN	Belgium – NBN	France – AFNOR	Great Britain B.S:	Italy – UNI
			Structural and constructional steels			
P	1.0401	C15	–	AF37C12	080A15	C15
	1.0402	C22	C25-1	AF42C20	055M15	C20
	1.0501	C35	C35-1	1C35	080A32	C35
	1.0503	C45	C45-1	1C45	060A47	C45
	1.0535	C55	C55-1	1C55	070M55	C55
	1.0601	C60	C60-1	1C60	060A62	C60
	1.0715	9SMn28	–	S250	230M07	CF9SMn28
	1.0718	9SMnPb28	–	S250Pb	–	CF9SMnPb28
	1.0722	10SPb20	–	10PbF2	–	CF10SPb20
	1.0726	10SPb2035S20	–	35MF6	212M36	–
	1.0736	9SMn36	–	S300	–	CF9SMn36
	1.0737	9SMnPb36	–	S300Pb	–	CF9SMnPb36
	1.1141	Ck15	C16-2	XC12	040A15	C15
	1.1157	40Mn4	–	35M5	150M36	–
	1.1158	C25E	C25-2	2C25	–	C25
	1-1167	36Mn5	–	35M5	150M36	–
	1.1170	28Mn6	28Mn6	20M5	–	C28Mn
	1.1183	Cf35	C36	XC38H1TS	080A35	C36
	1.1191	C45E	C45-2	2C45	080M46	C45
	1.1203	C55E	C55-2	2C55	060A57	C55
	1.1213	Cf53	C53	XC48H1TS	070M55	C53
	1.1221	C60E	C60-2	2C60	060A62	C60
	1.1274	Ck101	–	XC100	–	C100
	1.3401	X120Mn12	–	Z120M12	–	GX120Mn12
	1.3505	100Cr6	–	100C6	2S135	100Cr6
	1.5415	16Mo3	16Mo3	15D3	1503-243B	16Mo3
	1.5423	16Mo5	16Mo5	–	–	16Mo5KG
	1.5622	14Ni6	18Ni6	16N6	–	14Ni6KG
	1.5662	X8Ni9	10Ni36	9Ni490	1501-510	X10Ni9
	1.5680	X12Ni5	12Ni20	Z18N5	–	–
	1.5752	14NiCr14	13NiCr12	12NC15	655H13	–
	1.6511	36CrNiMo4	–	36CrNiMo4	817M37	38NiCrMo4
	1.6523	21NiCrMo2	–	20NCD2	805H20	20NiCrMo2
	1.6546	40NiCrMo2-2	40NiCrMo2	40NCD2	3111-Type7	40NiCrMo2
	1.6582	34CrNiMo6	35CrNiMo6	34CrNiMo8	816M40	35NiCrMo6KB
	1.6587	17CrNiMo6	17CrNiMo7	18NCD6	–	–
	1.6657	14NiCrMo13-4	14NiCrMo13	16NCD13	832H13	15NiCrM13
	1.7015	15Cr3	15Cr2	12C3	523M15	–
	1.7033	34Cr4	34Cr4	32C4	530A32	34Cr4
	1.7035	41Cr4	41Cr4	41Cr4	530A40	41Cr4
	1.7045	42Cr4	–	42C4TS	530A40	41Cr4
	1.7131	16MnCr5	16MnCr5	16MC4	527M17	16MnCr5
	1.7176	55Cr3	55Cr3	55C3	525A58	55Cr3
	1.7218	25CrMo4	25CrMo4	25CD4	708A25	25CrMo4
	1.7220	34CrMo4	34CrMo4	34CrMo4	708A37	34CrMo4KB
	1.7223	41CrMo4	41CrMo4	42CD4TS	708M40	41CrMo4
	1.7225	42CrMo4	42CrMo4	42CD4	708A42	38CrMo4KB
	1.7262	15CrMo5	–	12CD4	–	–
	1.7335	13CrMo4-5	14CrMo45	15CD3,5	620-440	14CrMo3
	1.7361	32CrMo12	32CrMo12	30CD12	722M24	32CrMo12
	1.7380	10CrMo9-10	–	12CD9.10	1501-622/515	12CrMo910
	1.7715	14MoV6-3	13MoCrV6	–	1503-660-460	–
	1.8159	51CrV4	50CrV4	50CV4	735A51	50CrV4
	1.8509	41CrAlMo7	41CrAlMo7	40CAD6.12	905M39	41CrAlMo7
	1.8523	39CrMoV13-9	39CrMoV13	–	897M39	–
			Tools steels			
P	1.1545	C105W1	–	C105E2U	–	C100KU
	1.1663	C125W	–	C120E3U	–	C120KU
	1.2067	102Cr6	–	100Cr6	–	–
	1.2080	X210Cr12	–	X200Cr12	BD3	X205Cr12KU
	1.2344	X40CrMoV5-1	–	X40CrMoV5	BH13	X40CrMoV511KU
	1.2363	X100CrMoV5-1	–	X100CrMoV5	BA2	X100CrMoV51KU
	1.2419	105WCr6	–	105WCr5	–	107WCr5KU
	1.2436	X210CrW12	–	X210CrW12-1	–	X215CrW121KU
	1.2542	45WCrV17	–	45WCrV8	BS1	45WCrV8KU
	1.2581	X30WCrV9-3		X30WCrV9	BH21	X30WCrV93KU
	1.2601	X165CrMoV12	–	–	–	X165CrMoW12KU
	1.2713	55NiCrMoV6	–	55NiCrMoV7	BH224/5	–
	1.2833	100V1	–	C105E2UV1	BW2	102V2KU
	1.3243	S6-5-2-5	–	Z85WDKCV06-05-04-02	BM35	HS6-5-2-5
	1.3255	S18-1-2-5	–	HS18-1-1-5	BT4	HS18-1-1-5
	1.3343	S6-5-2	–	HS6-5-2	BM2	HS6-5-2
	1.3348	S2-9-2	–	HS2-9-2	–	HS2-9-2
	1.3355	S18-0-1		HS18-0-1	BT1	HS18-0-1

ISO	Japan – JIS	Schweden – SS	Russia – GOST	Spain – UNE	USA – AISI/SAE/ASTM
			Structural and constructional steels		
P	S15C	1350	–	F.111	M1015
	S20C	1450	20	1C22	M1020
	S35C	1572	35	F.113	1035
	S45C	1672	45	F.114	1045
	S55C	1655	55	–	1055
	S58C	–	60	–	1060
	SUM22	1912	–	F.2111-11SMn28	1213
	SUM22L	1914	–	F.2112-11SMnPb28	12L13
	–	–	–	F.2122-10SPb20	11L08
	–	1957	–	F.210.G	1140
	SUM25	–	–	F.2113-12SMn35	1215
	–	1926	–	F.2114-12SMnPb35	12L14
	S15	1370	15	F.1110-C15k	1015
	–	–	40G	–	1035
	S25C	–	25	F.1120-C25k	1025
	SMn438	2120	35G2	F.1203-36Mn6	1335
	SCMn1	–	30G	28Mn6	1330
	S35C	1572	35	–	1035
	S45C	1672	45	F.1140-C45k	1045
	S55C	1655	55	F.1150-C55k	1055
	S50C	1674	50	–	1050
	S58C	1665	60	–	1060
	SUP4	1870	–	–	1095
	SCMnH1	2183	110G13L	F.8251-AM-X120Mn12	A128
	SUJ2	2258	SchCh15	F.1310-100Cr6	52100
	–	2912	–	F.2601-16Mo3	A204Gr.A
	SB450M	–	–	F.2602-16Mo5	4520
	–	–	–	F.2641-15Ni6	A350-LF5
	SL9N53	–	–	F.2645-X8Ni09	A353
	–	–	–	–	2515
	SNC815	–	–	–	3310
	–	–	40ChN2MA	F.1280-35NiCrMo4	4340
	SNCM220	2506	–	F.1522-20NiCrMo2	8620
	SNCM240	–	38ChGNM	F.1204-40NiCrMo2	8740
	SNCM447	2541	38Ch2N2MA	F.1272-40NiCrMo7	4337
	–	–	–	F.1560-14NiCrMo13	–
	–	–	–	F.1560-14NiCrMo13	9310
	SCr415	–	15Ch	–	5015
	SCr430	–	35Ch	F.8221-35Cr4	5132
	SCr440	–	40Ch	F.1211-41Cr4DF	5140
	SCr440	2245	40Ch	F.1202-42Cr4	5140
	–	2173	18ChG	F.1516-16MnCr5	5115
	SUP9	2253	50ChGA	F.1431-55Cr3	5155
	SCM420	2225	20ChM	F.8372-AM26CrMo4	4130
	SCM432	2234	AS38ChGM	F.8331-AM34CrMo4	4135
	SCM440	2244	40ChFA	F.8332-AM42CrMo4	4140
	SCM440	2244	–	F.8332-AM42CrMo4	4140
	SCM415	–	–	F.1551-12CrMo4	–
	SFVA12	2216	12ChM	F.2613-14CrMo45	A182-F11
	–	2240	–	F.124.A	–
	SFVAF22A	2218	12Ch8	TU.H	A182F22
	–	–	–	F.2621-13MoCrV6	–
	SUP10	2230	50ChGFA	F.1430-51CrV4	6145
	SACM645	2940	38ChMJuA	F.1740-41CrAlMo7	A355Cl.A
	–	–	–	–	–
			Tools steels		
P	SK3	1880	U10A-1	F.515	W110
	SK2	–	U13-1	F.5123-C120	W112
	SUJ2	–	Ch	F.5230-100Cr6	L1
	SKD1	–	Ch12	F.5212-X210Cr12	D3
	SKD61	2242	4Ch5MF1S	F.5318-X40CrMoV5	H13
	SKD12	2260	–	F.5227-X100CrMoV5	A2
	SKD2	2140	–	F.5233-105WCr5	–
	–	2312	–	F.5213-X210CrW12	–
	–	2710	5ChW2SF	F.5241-45WCrSi8	S1
	SKD5	–	3Ch2W8F	F.5323-X30WCrV9	H21
	–	–	–	F.5211-X160CrMoV12	–
	SKT4	–	5ChNM	F.520S	L6
	SKS43	–	–	–	W210
	SKH55	2733	R6M5K5	F.5613-6-5-2-5	–
	SKH3	–	–	F.5530-18-1-1-5	T4
	SKH51	2722	R6M5	F.5603-6-5-2	M2
	–	2782	–	F.5607-2-9-2	M7
	SKH2	–	R18	F.5520-18-0-1	T1

ISO	W-Nr.	Germany – DIN	Belgium – NBN	France – AFNOR	Great Britain B.S:	Italy – UNI
			Stainless and heat resisting steels			
P	1.4000	X6Cr13	–	Z8C12	403S17	X6Cr13
	1.4001	X7Cr14	–	Z8C13FF	403S17	X6Cr13
	1.4006	X12Cr13	–	Z10C13	410S21	X12Cr13
	1.4016	X6Cr17	–	Z8C17	430S17	X8Cr17
	1.4027	GX20Cr14	–	Z20C13M	ANC1B	–
	1.4034	X46Cr13	–	Z44C14	–	X40Cr14
	1.4057	X20CrNi172	–	Z15CN16-02	431S29	X16CrNi16
	1.4104	X12CrMoS17	–	Z13CF17	–	X10CrS17
	1.4113	X6CrMo17-1	–	–	434S17	X8CrMo17
	1.4313	X4CrNi134	–	Z4CND13.4M	425C11	GX6CrNi1304
	1.4408	GX5CrNiMo19-11	–	–	316C16	–
	1.4718	X45CrSi9-3	–	Z45CS9	401S45	X45CrSi8
	1.4724	X10CrAl13	–	Z13C13	–	X10CrAl12
	1.4742	X10CrAl18	–	Z12CAS18	–	–
	1.4747	X80CrNiSi20	–	Z80CNS20-02	443S65	X80CrSiNi20
	1.4762	X10CrAl24	–	Z12CAS25	–	–
M	1.4301	X5CrNi1810	–	Z4Cn19-10FF	304S11	X5CrNi1810
	1.4305	X10CrNiS189	–	Z8CNF19-09	303S22	X10CrNiS1809
	1.4306	X2CrNi19-11	–	Z1CN18-12	304S11	X3CrNi1811
	1.4308	GX5CrNi19-10	–	Z6CN18.10M	304C15	–
	1.4310	X12CrNi177	–	Z11CN17-08	301S21	X12CrNi1707
	1.4311	X2CrNiN18-10	–	Z3CN18-07Az	304S61	X2CrNiN1811
	1.4401	X5CrNiMo17122	–	Z3CND17-11-01	316S13	X5CrNiMo1712
	1.4429	X2CrNiMoN17-13-3	–	Z3CND17-12Az	316S63	X2CrNiMoN1713
	1.4435	X2CrNiMo18-14-3	–	Z3CND17-12-03	316S11	X2CrNiMo1713
	1.4438	X2CrNiMo18164	–	Z2CND19-15-04	317S12	X2CrNiMo1816
	1.4460	X4CrNiMoN2752	–	Z5CND27-05Az	–	–
	1.4541	X6CrNiTi18-10	–	Z6CNT18-10	321S31	X6CrNiTi1811
	1.4550	X6CrNiNb18-10	–	Z6CNNb18-10	347S20	X6CrNiNb1811
	1.4571	X6CrNiMoTi17-12-2	–	Z6CNDT17-12	320S18	X6CrNiMoTi1712
	1.4581	GX5CrNiMoNb1810	–	Z4CNDNb18.12M	318C17	GX6CrNiMoNb2011
	1.4583	X10CrNiMoNb18-12	–	–	–	X6CrNiMoNb1713
	1.4828	X15CrNiSi20-12	–	Z9CN24-13	309S24	X16CrNi2314
	1.4845	X12CrNi25-21	–	Z8CN25-20	310S16	X6CrNi2521
	1.4864	X12NiCrSi36-16	–	Z20NCS33-16	NA17	–
	1.4865	GX40NiCrSi38-18	-	–	330C11	GX50NiCr3919
	1.4871	X53CrMnNiN21-9	–	Z53CMNS21-09Az	349S54	X53CrMnNiN219
	1.4878	X12CrNiTi18-9	–	Z6CNT18-10	321S51	–
			Cast materials			
K	–	GG10	–	Ft10D	–	G10
	–	GG15	–	Ft15D	Grade150	G15
	–	GG20	–	Ft20D	Grade220	G20
	–	GG25	–	Ft15D	Grade260	G25
	–	GG30	–	Ft30D	Grade300	G30
	–	GG35	–	Ft35D	Grade350	G35
	–	GG40	–	Ft40D	Grade400	–
	–	GGG40	–	FGS400-12	420/12	GS400-12
	–	GGG40.3	–	FGS370-17	370/17	GS042/15
		GGG50		FGS500-7	500/7	GS500/7
	–	GGG60	–	FGS600-3	600/3	GS600/3
	–	GGG70	–	FGS700-2	700/2	GS700/2
	–	GGGNiMn137	–	S-NM137	S-NiMn137	–
	–	GGGNiCr202	–	S-NC202	S-NiCr202	–

ISO	Japan – JIS	Schweden – SS	Russia – GOST	Spain – UNE	USA – AISI/SAE/ASTM
			Stainless and heat resisting steels		
P	SUS403	2301	08Ch13	F.3110-X6Cr13	403
	SUS410S	2301	08Ch13	F.8401-AM-X12Cr13	410S
	SUS410	2302	12Ch13	F.3401-X10Cr13	410
	SUS430	2320	12Ch17	F.3113-X6Cr17	430
	SCS2	—	20Ch13L	–	–
	–	2321	40Ch13	F.3405-X45Cr13	–
	SUS431	2383	20Ch17N2	F.3427-X19CrNi172	431
	SUS430F	–	–	F.3117-X10CrS17	430F
	SUS434	2384	–	F.3116-X6CrMo171	434
	SCS5	–	–	–	–
	SCS14	–	07Ch18N10G2S2M2L	F.8414-AM-X7CrNiMo2010	CF-8M
	SUH1	–	40Ch9S2	F.3220-X4SCrSi09-03	HNV3
	–	–	10Ch13SJu	F.3152-X10CrAl13	–
	SUH21	–	15Ch18SJu	F.3153-X10CrAl18	–
	SUH4	–	–	F.3222-X80CrSiNi20-02	HNV6
	–	–	–	F.3154-X10CrAl24	–
M	SUS304	2332	08Ch18N10	F.3504-X5CrNi1810	304
	SUS303	2346	–	F.3508-X10CrNiS18-09	303
	SCS19	2352	03Ch18N11	F.3503-X2CrNi1810	304L
	SCS13	2333	07Ch18N9L	–	CF-8
	SUS301	2331	–	F.3517-X12CrNi177	301
	SUS304LN	2371	–	F.3541-X2CrNiN1810	304LN
	SUS316	2347	–	F.3534-X5CrNiMo17122	316
	–	2375	–	F.3543-X2CrNiMoN17313	316LN
	SUS316L	2353	03Ch17N14M3	F.3533-X2CrNiMo17132	316L
	SUS317L	2367	–	F.3539-X2CrNiMo18164	317L
	SUS329J1	2324	–	F.3309-X8CrNiMo27-05	329
	SUS321	2337	06Ch18N10T	F.3523-X6CrNiTi1810	321
	SUS347	2338	08Ch18N12B	F.3524-X6CrNiNb1810	347
	SUS316Ti	2353	10Ch17N13M2T	F.3535-X6CrNiMoTi17122	316Ti
	SCS22	–	–	–	–
	–	–	–	–	318
	SUH309	–	20Ch20N14S2	F.3312-X15CrNiSi20-12	309
	SUH310	2361	20Ch23N18	–	310S
	SUH330	–	–	F.3313-X12CrNiSi36-16	330
	SCH15	–	–	–	–
	SUH35	–	55Ch20G9AN4	F.3217-X53CrMnNiN21-09	EV8
	SUS321	–	–	–	321
			Cast materials		
K	FC10	0110-00	Sc10	FG10	A48-20B
	FC15	0115-00	Sc15	FG15	A48-25B
	FC20	0120-00	Sc20	FG20	A48-30B
	FC25	0125-00	Sc25	FG25	A48-40B
	FC30	0130-00	Sc30	FG30	A48-45B
	FC35	0135-00	Sc35	FG35	A48-50B
	–	0140-00	Sc40	Ft40D	A48-60B
	FCD40	0717-02	VC42-12	–	60-40-18
	–	0717-15	VC42-12	–	–
	FCD50	0727-02	VC50-2	–	65-45-12
	FCD60	0732-03	VC60-2	–	80-55-06
	FCD70	0737-01	VC70-2	–	100-70-03
	–	–	–	–	–
	–	–	–	–	A439TypeD-2

Tensile strength N/mm²	Vickers HV	Brinell HB	Rockwell HRC	Shore „SH“
700	200		–	28
740	210		–	29
770	220		–	30
810	230		19,2	31
840	240		21,2	33
880	250		23,0	34
910	260		24,7	35
950	270		26,1	36
980	280		27,6	37
1020	290		29,0	39
1050	300		30,0	40
1090	310		31,5	41
1120	320		32,9	42
1150	330		33,8	43
1190	340		34,9	44
1230	350		36,0	45
1260	360	359	37,0	46
1300	370	368	38,0	47
1330	380	373	38,9	48
1370	390	385	39,8	49
1400	400	393	40,7	50
1440	410	400	41,5	51
1470	420	407	42,3	52
1510	430	416	43,2	53
1540	440	423	44,0	54
1580	450	429	44,8	55
1610	460	435	45,5	56
1650	470	441	46,3	57
1680	480	450	47,0	58
1720	490	457	47,7	59
1750	500	465	48,3	60
1790	510	474	49,0	61
1820	520	482	49,6	62
1860	530	489	50,3	63
1890	540	496	50,9	64
1930	550	503	51,5	65
1960	560	511	52,1	66
2000	570	520	52,7	67
2030	580	527	53,3	68
2070	590	533	53,8	69
2100	600	533	54,4	70
2140	610	543	54,9	71
2170	620	549	55,4	72
2210	630	555	55,9	73
2240	640	561	56,4	74
2280	650	568	56,9	75
2310	660	574	57,4	75
2350	670	581	57,9	76
2380	680	588	58,7	77
2410	690	595	58,9	78
2450	700	602	59,3	79
2480	710	609	59,8	80
2520	720	616	60,2	81
2550	730	622	60,7	82
2590	740	627	61,1	83
2630	750	633	61,5	83
2660	760	639	61,9	84
2700	770	644	62,3	85
2730	780	650	62,7	86
2770	790	656	63,1	86
2800	800	661	63,5	87
2840	810	666	63,9	87
2870	820	670	64,3	88
2910	830	677	64,6	89
2940	840	682	65,0	89
2980	850	–	65,3	90
3010	860	–	65,7	90
3050	870	–	66,0	91
3080	880	–	66,3	91
3120	890	–	66,6	92
3150	900	–	66,9	92
3190	910	–	67,2	–
3220	920	–	67,5	–
3260	930	–	67,7	–
3290	940	–	68,0	–

Flank Wear

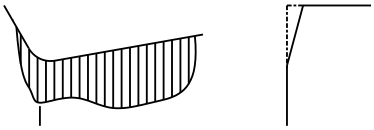

Abrasive form of wear, resulting from mechanical stresses - can be seen as a flat on the clearance of the cutting edge. Excessive flank wear results in bad surface finish, inaccuracy and increasing friction.

Solution:
- Reduce cutting speed
- Choose more wear resistant grade

Notch Wear

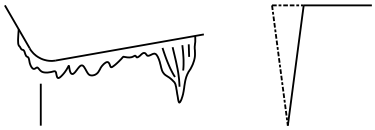

Notch wear on the main cutting edge can be seen where the cutting edge and workpiece has its contact. The main reason are hard particles in the workpiece material. Excessive notch wear influences chip formation and can also lead to insert breakage.

Solution:
- Reduce cutting speed
- Choose more wear resistant grade

Crater Wear

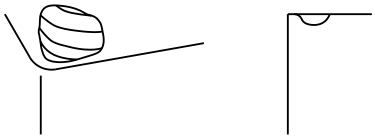

Wear on the rake angle caused by diffusion and abrasion. Crater wear results from the contact of the chip and cutting material and diffusion at the hot part of the cutting edge. Excessive crater wear changes the geometry, can disturb chip formation and weaken the cutting edge.

Solution:
- Reduce cutting speed
- Reduce feed rate
- Use coated carbide grades
- Choose positive cutting geometry

Plastic Deformation

Wear caused by high temperature and stress on the cutting edge - mainly because of high cutting speeds, feed rates and hard workpiece materiales. Plastic deformation leads to bad chip formation, surface quality and in some cases to insert breakage.

Solution:
- Reduce cutting speed
- Reduce feed rate
- Choose more wear resistant grade

Build-up Edge

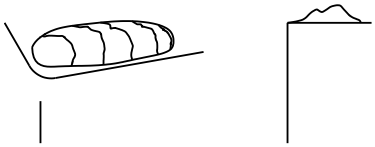

Welding of workpiece material on the cutting material. Cutting geometry will change and build-up edge will generally lead to cutting edge breakouts. Build-up edges lead to bad surface finish and breakage of the insert.

Solution:
- Increase cutting speed
- Choose positive cutting geometry
- Use coated carbide grades or cermets
- Use lubricant

Cutting Edge Outbreaks

Instead of having uniform wear, small parts of the cutting edge break away. The main reason is interrupted cutting. Cutting edge outbreaks lead to bad surface finish and excessive flank wear.

Solution:
- Reduce feed rate when starting machining
- Choose carbide grade with higher toughness
- Use indexable insert with stronger cutting edge.

Insert Breakage

Insert breakage will mainly damage the tool and work piece. The reasons are mainly excessive wear or stress on the cutting edge but can also be the machine or the workpiece.

Solution:
- Choose tougher grade
- Reduce feed rate and/or depth of cut
- Choose indexable insert with higher stability or larger corner radius, if possible single sided indexable inserts.

Thermal Cracks

Cracks vertical to the cutting edge, resulting from changing temperature during interrupted cutting.

Solution:
- Use a carbide grade with higher toughness
- Pay attention to the use of lubricants
  - either in good quantity or none

Units

D	Diameter	[mm]
l	Length	[mm]
v_c	Cutting speed	[m/min]
f_n	Feed rate per revolution	[mm/U]
a_p	Depth of cut	[mm]
n	Spindle revolution	[U/min]
Q	Chip removal rate	[cm³/min]
P_c	Power	[kW]
k_c	Special cutting force	[N/mm²]

Formulas

Cutting speed

$$v_c = \frac{\pi \cdot D \cdot n}{1000}$$

Revolution per minute

$$n = \frac{v_c \cdot 1000}{\pi \cdot D}$$

Chip removal rate

$$Q = v_c \cdot a_p \cdot f_n$$

Power

$$P_c = \frac{a_p \cdot f_n \cdot k_c \cdot v_c}{6} \cdot 10^{-4}$$

i

Turning – Clamping Systems

NEW

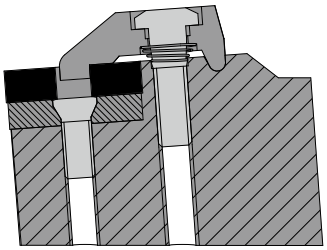

Top Clamping – Negative

By using the top clamping style, the insert is located and pulled back into the insert seat. This ensures maximum positioning accuracy and eliminates the risk of uneven insert location. The boring bars are with coolant through (A...DWLNR...) which ensures optimum coolant and swarf evacuation.

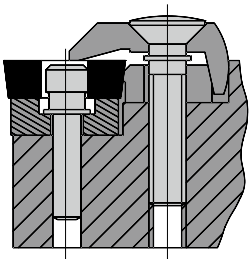

Top Clamping – Positive

Clamping system for positive indexable inserts by means of a wedge (clamping through the hole and from the top). A carbide support pad gives additional protection to the toolholder.

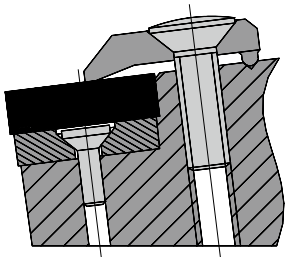

Top Clamping – Negative

Clamping system for negative indexable inserts. Strong clamping and easy to handle. A carbide support pad gives additional protection to the toolholder.

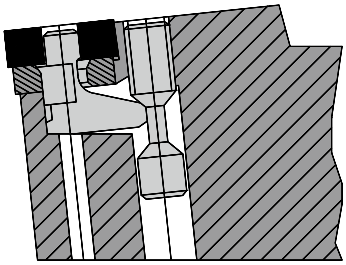

Lever Lock Clamping – Negative

Clamping system by means of a lever lock for negative inserts with a hole. Quick change of indexable insert and firmer clamping are the main advantages. No loose spare parts during change of insert. A carbide support pad gives additional protection to the toolholder.

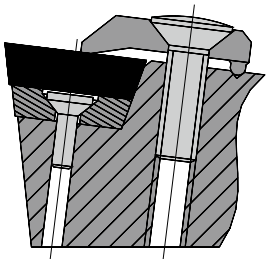

Top Clamping – Positive

Clamping system for positive indexable inserts. Strong clamping and easy to handle. A carbide support pad gives additional protection to the toolholder.

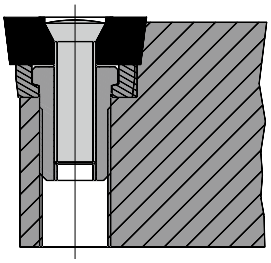

Screw Clamping – Positive

Clamping system for positive indexable inserts with trumpet-shaped holes. Simple clamping system, no obstructions for chip flow and simple change of spare parts. A carbide support pad gives additional protection to the toolholder.

Usage of WIPER Geometries

All the WIPER geometries have a trailing edge, which is located between the radius run-out and the corner cutting edge. Even when doubling the feed rates the surface finish will remain the same. Due to the reduced machine time, the optimum swarf control and increase in tool life will achieve considerable productivity savings.

Advantages

- **Improvement of surface finish**
  With the same machining data you will achieve a considerably better surface finish
- **Higher feed rate**
  Roughing and finishing with just one insert
- **Optimum swarf control**
  At higher feed rates the swarf gets thicker and breaks easier
- **Improved tool life**
  Higher feed rate reduces the machine time per part and therefore reduces the insert wear

Approach Angle

The approach angle must be correctly applied, otherwise the WIPER effect will not be achieved and surface finish will not improve.

The following approach angles should be used:

- CCGT 95° degree
- DCGT 93° degree
- VCGT 93° degree
- WCGT 95° degree

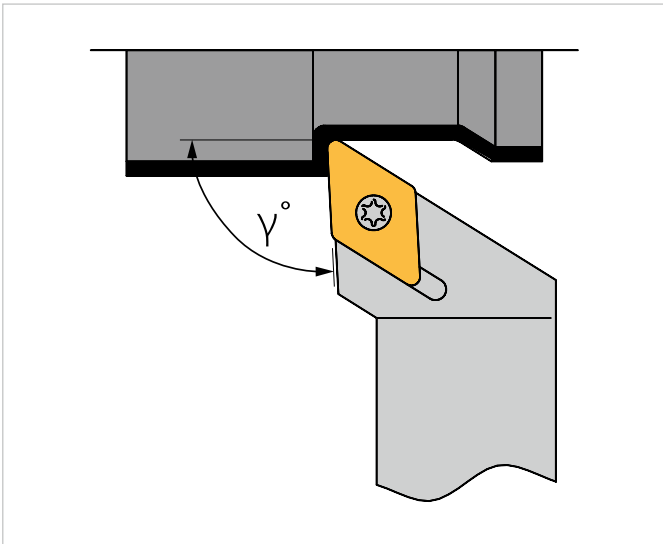

Conture distortion

Because of the trailing edge distortion can occur (see drawing). Radii, chamfers and kones all incur distortion.

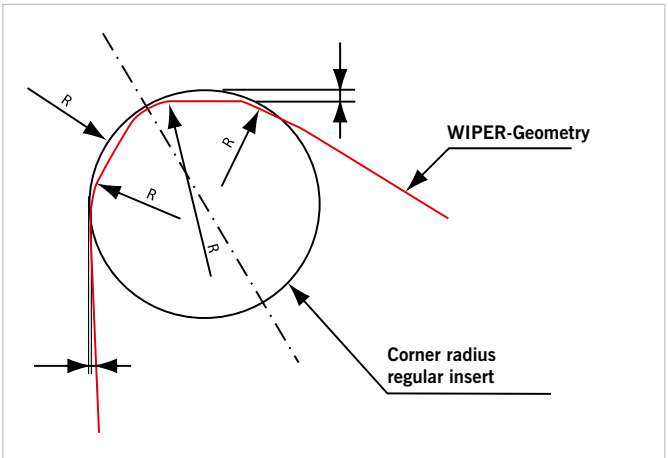

Cutting direction

The WIPER geometries are direction bound due to the trailing edge. Only in that direction the chip will flow off the cutting edge. This should be observed when turning and facing (for example when turning a large diameter to a small diameter).

Cutting Data

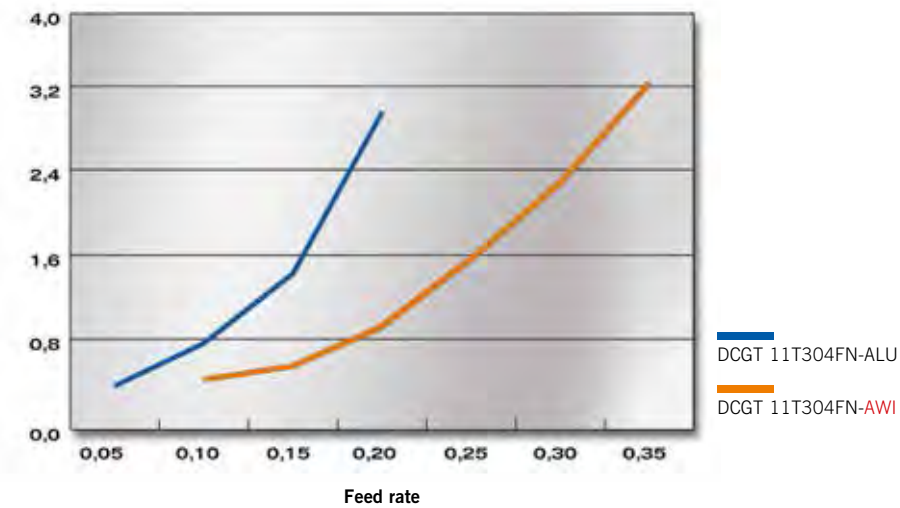

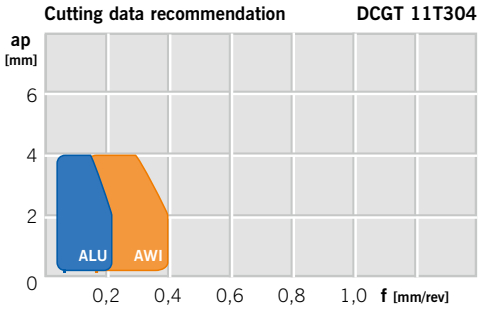

Turning – Carbide

coated

ISO	Material		Tensile strength [N/mm²]	Cutting speed Vc [m/min]										
				AK2010	AK2110	AK2310	AK2320	AM2030	AM2035	AM2110	AM2130	AM5015	AM5020	AM5025
P	Unalloyed steel and cast steel	ca. 0,15% C	350	-	220 - 380	220 - 380	200 - 340	170 - 220	180 - 230	-	-	220 - 320	180 - 230	180 - 230
		ca. 0,45% C	650	-	190 - 330	190 - 330	180 - 290	160 - 180	170 - 190	-	-	180 - 290	170 - 190	170 - 190
		ca. 0,75% C	1000	-	160 - 280	160 - 280	150 - 240	120 - 140	130 - 150	-	-	150 - 250	130 - 150	130 - 150
	Low alloyed steel and cast steel		600	-	180 - 300	180 - 300	170 - 260	160 - 180	170 - 190	-	-	180 - 280	170 - 190	170 - 190
			900	-	160 - 260	160 - 260	150 - 240	80 - 140	90 - 150	-	-	170 - 250	90 - 150	90 - 150
			1200	-	120 - 220	120 - 220	120 - 220	60 - 120	70 - 130	-	-	150 - 220	70 - 130	70 - 130
	High alloyed steel, high alloyed tool steel and cast steel	annealed	700	-	140 - 220	140 - 220	140 - 200	110 - 190	120 - 200	-	-	80 - 160	120 - 200	120 - 200
		hardened and tempered	1100	-	70 - 130	70 - 130	70 - 120	40 - 90	50 - 100	-	-	40 - 130	50 - 100	50 - 100
	Stainless steel and cast steel	ferritic / martensitic, annealed	700	-	140 - 220	140 - 220	140 - 220	130 - 170	140 - 180	-	-	60 - 180	140 - 180	140 - 180
		martensitic, hardened and tempered	1000	-	70 - 130	70 - 130	70 - 110	100 - 150	110 - 140	-	-	40 - 140	110 - 140	110 - 140
M	Stainless steel and cast steel	austenitic and austenitic/ferritic	450 - 600	-	-	-	-	100 - 180	100 - 180	120 - 200	100 - 140	80 - 160	120 - 200	120 - 200
		chilled	600 - 900	-	-	-	-	70 - 140	70 - 140	70 - 180	70 - 140	40 - 130	90 - 160	90 - 160
K	Cast iron	pearlitic, ferritic	500 - 700	150 - 210	250 - 380	250 - 380	250 - 340	-	-	-	-	180 - 300	-	120 - 160
		pearlitic, martensitic	700 - 850	220 - 350	190 - 300	190 - 300	190 - 250	-	-	-	-	160 - 280	-	90 - 130
			800 - 1100	-	-	-	-	-	-			120 - 240	-	-
	Cast iron with nodular graphite	ferritic	550	220 - 380	220 - 300	220 - 300	200 - 260	-	-	-	-	140 - 230	-	120 - 160
		pearlitic	800	200 - 350	150 - 230	150 - 230	150 - 200	-	-	-	-	120 - 170	-	120 - 180
	Malleable cast iron	ferritic	450	200 - 400	200 - 300	200 - 300	200 - 260	-	-	-	-	150 - 210	-	140 - 220
		pearlitic	750	180 - 320	170 - 230	170 - 230	170 - 200	-	-	-	-	150 - 210	-	110 - 160
N	Aluminum alloys, long chipping	not heat treatable	200	-	-	-	-	-	-	-	-	-	-	-
		heat treatable, heat treated	350	-	-	-	-	-	-	-	-	-	-	-
	Casted aluminum alloys	≤ 12% Si, hardened	250	-	-	-	-	-	-	-	-	-	-	-
		≤ 12% Si, heat treatable, hardened	300	-	-	-	-	-	-	-	-	-	-	-
		≤ 12% Si, not heat treatable	450	-	-	-	-	-	-	-	-	-	-	-
	Copper and copper alloys (brass / bronze)	Lead alloys, Pb > 1%	400	-	-	-	-	-	-	-	-	200 - 500	-	-
		Brass, bronze	300	-	-	-	-	-	-	-	-	200 - 500	-	-
		Aluminum bronze	500	-	-	-	-	-	-	-	-	160 - 450	-	-
		Copper and electrolyte copper	200	-	-	-	-	-	-	-	-	100 - 320	-	-
	Nonferrous materials	Duroplastics		-	-	-	-	-	-	-	-	160 - 600	-	-
		Reinforced plastics		-	-	-	-	-	-	-	-	100 - 300	-	-
		Hard rubber		-	-	-	-	-	-	-	-	-	-	-
S	High temperature resistant alloys	Fe-alloyed annealed	700	-	-	-	-	20 - 40	20 - 40	-	-	20 - 60	-	20 - 50
		Fe-alloyed hardened	950	-	-	-	-	15 - 35	15 - 35	-	-	20 - 60	-	20 - 50
		Ni- oder Co- based annealed	800	-	-	-	-	8 - 25	8 - 25	-	-	15 - 50	-	15 - 40
		Ni- oder Co- based casting	1100	-	-	-	-	4 - 15	4 - 15	-	-	15 - 40	-	10 - 25
		Ni- oder Co- based hardened	1200	-	-	-	-	4 - 15	4 - 15	-	-	15 - 40	-	20 - 35
	Titanium alloys, high strength	Pure titanium	500 - 700	-	-	-	-	80 - 130	80 - 130	-	-	90 - 180	-	80 - 140
	Alpha- and beta-alloys, hardened		700 - 1000	-	-	-	-	15 - 35	15 - 35	-	-	40 - 80	-	25 - 45
H	Hardened steel	hardened and tempered	1000 - 1350	-	-	-	-	-	-	-	-	30 - 50	-	-
		hardened and tempered	1350 - 1700	-	-	-	-	-	-	-	-	10 - 25	-	-
	Hard cast iron	casting	1350	-	-	-	-	-	-	-	-	40 - 70	-	-
	Hardened cast iron	hardened and tempered	1900	-	-	-	-	-	-	-	-	10 - 25	-	-

The datas cutting speeds given are approximate values. It is necessary to adjust them to the individual machining operation.

More grades on the following pages.

Turning – Carbide

coated

ISO	Material		Tensile strength [N/mm²]	Cutting speed Vc [m/min]										
				AM5110	AM5120	AM5120+	AM5130	AM5220	AP2025	AP2030	AP2035	AP2110	AP2120	AP2135
P	Unalloyed steel and cast steel	ca. 0,15% C	350	220 - 350	220 - 320	180 - 280	170 - 240	180 - 280	190 - 240	190 - 240	180 - 230	300 - 400	250 - 350	180 - 270
		ca. 0,45% C	650	180 - 310	180 - 290	160 - 250	160 - 220	160 - 250	170 - 200	170 - 200	170 - 190	260 - 350	210 - 300	170 - 230
		ca. 0,75% C	1000	150 - 270	150 - 250	120 - 220	140 - 200	120 - 220	130 - 160	130 - 160	130 - 150	240 - 300	180 - 230	160 - 210
	Low alloyed steel and cast steel		600	180 - 300	180 - 260	-	170 - 220	160 - 250	170 - 200	170 - 200	170 - 190	220 - 300	180 - 270	160 - 220
			900	170 - 270	150 - 220	-	170 - 200	140 - 230	100 - 160	100 - 160	90 - 150	180 - 260	160 - 220	140 - 180
			1200	150 - 240	80 - 190	-	150 - 200	120 - 200	80 - 140	80 - 140	70 - 130	120 - 220	100 - 200	100 - 160
	High alloyed steel, high alloyed tool steel and cast steel	annealed	700	80 - 180	80 - 150	-	80 - 150	70 - 150	130 - 170	130 - 170	120 - 200	150 - 220	130 - 200	130 - 180
		hardened and tempered	1100	40 - 140	40 - 130	-	40 - 120	35 - 120	80 - 130	80 - 130	50 - 100	70 - 150	70 - 140	70 - 120
	Stainless steel and cast steel	ferritic / martensitic, annealed	700	40 - 180	40 - 150	50 - 160	40 - 160	50 - 160	130 - 180	130 - 180	140 - 180	-	-	-
		martensitic, hardened and tempered	1000	40 - 160	40 - 140	40 - 140	40 - 160	40 - 140	110 - 160	110 - 160	110 - 160	-	-	-
M	Stainless steel and cast steel	austenitic and austenitic/ferritic	450 - 600	80 - 180	80 - 160	70 - 150	80 - 150	70 - 150	100 - 170	100 - 170	110 - 190	-	-	-
		chilled	600 - 900	40 - 140	40 - 130	35 - 120	40 - 120	35 - 120	-	-	80 - 150	-	-	-
K	Cast iron	pearlitic, ferritic	500 - 700	180 - 350	180 - 300	180 - 300	180 - 240	180 - 300	130 - 200	130 - 200	-	160 - 230	-	-
		pearlitic, martensitic	700 - 850	160 - 300	160 - 280	160 - 280	160 - 220	160 - 280	120 - 180	120 - 180	-	150 - 200	-	-
			800 - 1100	120 - 270	120 - 240	120 - 240	120 - 200	120 - 240	-	-	-	-	-	-
	Cast iron with nodular graphite	ferritic	550	140 - 230	140 - 230	-	140 - 200	140 - 230	120 - 170	120 - 170	-	160 - 210	-	-
		pearlitic	800	120 - 170	120 - 170	-	110 - 160	120 - 170	120 - 190	120 - 190	-	130 - 170	-	-
	Malleable cast iron	ferritic	450	150 - 210	150 - 210	-	130 - 190	150 - 210	150 - 230	150 - 230	-	150 - 210	-	-
		pearlitic	750	150 - 210	150 - 210	-	130 - 190	150 - 210	120 - 170	120 - 170	-	150 - 210	-	-
N	Aluminum alloys, long chipping	not heat treatable	200	-	-	-	-	-	-	-	-	-	-	-
		heat treatable, heat treated	350	-	-	-	-	-	-	-	-	-	-	-
	Casted aluminum alloys	≤ 12% Si, hardened	250	-	-	-	-	-	-	-	-	-	-	-
		≤ 12% Si, heat treatable, heat treated	300	-	-	-	-	-	-	-	-	-	-	-
		≤ 12% Si, not heat treatable	450	-	-	-	-	-	-	-	-	-	-	-
	Copper and copper alloys (brass / bronze)	Lead alloys, Pb > 1%	400	200 - 650	200 - 500	150 - 500	200 - 500	-	-	-	-	-	-	-
		Brass, bronze	300	200 - 650	200 - 500	150 - 500	200 - 500	-	-	-	-	-	-	-
		Aluminum bronze	500	160 - 350	160 - 300	120 - 400	150 - 220	-	-	-	-	-	-	-
		Copper and electrolyte copper	200	120 - 220	120 - 200	120 - 250	120 - 220	-	-	-	-	-	-	-
	Nonferrous materials	Duroplastics		160 - 600	160 - 600	-	140 - 500	-	-	-	-	-	-	-
		Reinforced plastics		100 - 300	100 - 300	100 - 300	100 - 300	-	-	-	-	-	-	-
		Hard rubber		-	-	-	-	-	-	-	-	-	-	-
S	High temperature resistant alloys	Fe-alloyed annealed	700	20 - 70	20 - 60	20 - 60	20 - 50	20 - 60	20 - 40	-	20 - 40	-	-	-
		Fe-alloyed hardened	950	20 - 70	20 - 60	20 - 60	20 - 50	20 - 60	15 - 35	-	15 - 35	-	-	-
		Ni- oder Co- based annealed	800	15 - 60	15 - 50	15 - 50	15 - 40	15 - 50	10 - 30	-	8 - 25	-	-	-
		Ni- oder Co- based casting	1100	15 - 50	15 - 40	15 - 40	15 - 40	15 - 40	5 - 18	-	4 - 15	-	-	-
		Ni- oder Co- based hardened	1200	15 - 50	15 - 40	15 - 40	15 - 40	15 - 40	5 - 18	-	4 - 15	-	-	-
	Titanium alloys, high strength	Pure titanium	500 - 700	100 - 210	90 - 180	-	80 - 170	-	80 - 130	-	80 - 130	-	-	-
	Alpha- and beta-alloys, hardened		700 - 1000	40 - 90	40 - 80	-	40 - 70	-	20 - 40	-	15 - 35	-	-	-
H	Hardened steel	hardened and tempered	1000 - 1350	30 - 55	30 - 50	-	30 - 45	-	-	-	-	-	-	-
		hardened and tempered	1350 - 1700	15 - 25	10 - 25	-	15 - 25	-	-	-	-	-	-	-
	Hard cast iron	casting	1350	40 - 80	40 - 70	-	40 - 65	-	-	-	-	-	-	-
	Hardened cast iron	hardened and tempered	1900	15 - 30	10 - 25	-	15 - 25	-	-	-	-	-	-	-

The datas cutting speeds given are approximate values. It is necessary to adjust them to the individual machining operation.

More grades on the following pages.

Turning – Carbide

coated

ISO	Material		Tensile strength [N/mm²]	Cutting speed Vc [m/min]											
				AP2310	AP2320	AP2335	AP5210	AL10	AM15C	AM25C	AM350	AM35C	AR27C	AR270	AR370
P	Unalloyed steel and cast steel	ca. 0,15% C	350	300 - 400	250 - 350	180 - 270	220 - 370	220 - 320	220 - 320	150 - 260	180 - 230	170 - 240	200 - 270	200 - 260	190 - 240
		ca. 0,45% C	650	260 - 350	210 - 300	170 - 230	180 - 330	180 - 290	180 - 250	140 - 210	170 - 190	150 - 200	180 - 230	180 - 220	170 - 200
		ca. 0,75% C	1000	240 - 300	180 - 230	160 - 210	150 - 290	150 - 250	140 - 200	120 - 180	100 - 140	80 - 150	120 - 180	120 - 180	100 - 150
	Low alloyed steel and cast steel		600	220 - 300	180 - 270	160 - 220	180 - 320	180 - 280	180 - 250	140 - 210	170 - 190	150 - 200	210 - 260	180 - 220	170 - 200
			900	180 - 260	160 - 220	140 - 180	170 - 290	170 - 250	160 - 220	130 - 190	90 - 150	80 - 160	120 - 190	120 - 180	100 - 160
			1200	120 - 220	100 - 200	100 - 160	150 - 260	150 - 220	140 - 200	120 - 180	70 - 130	60 - 140	120 - 160	120 - 150	80 - 140
	High alloyed steel, high alloyed tool steel and cast steel	annealed	700	150 - 220	130 - 200	130 - 180	80 - 180	-	140 - 230	120 - 200	120 - 200	110 - 170	140 - 200	140 - 180	130 - 170
		hardened and tempered	1100	70 - 150	70 - 140	70 - 120	40 - 150	-	110 - 200	100 - 160	50 - 100	60 - 130	100 - 160	100 - 150	80 - 130
	Stainless steel and cast steel	ferritic / martensitic, annealed	700	-	-	-	40 - 140	170 - 290	170 - 260	140 - 240	140 - 180	110 - 180	170 - 230	170 - 220	130 - 180
		martensitic, hardened and tempered	1000	-	-	-	40 - 120	140 - 280	110 - 200	110 - 200	110 - 160	90 - 160	130 - 190	130 - 180	110 - 160
M	Stainless steel and cast steel	austenitic and austenitic/ferritic	450 - 600	-	-	-	70 - 150	140 - 280	210 - 250	100 - 170	120 - 190	100 - 170	150 - 220	150 - 200	100 - 170
		chilled	600 - 900	-	-	-	35 - 120	-	100 - 170	80 - 150	80 - 150	-	-	-	-
K	Cast iron	pearlitic, ferritic	500 - 700	-	-	-	180 - 350	180 - 300	210 - 250	170 - 230	-	-	120 - 180	-	-
		pearlitic, martensitic	700 - 850	-	-	-	160 - 300	160 - 280	90 - 130	90 - 120	-	-	120 - 180	-	-
			800 - 1100	-	-	-	120 - 270	120 - 240	90 - 130	90 - 120	-	-	100 - 150	-	-
	Cast iron with nodular graphite	ferritic	550	-	-	-	140 - 230	140 - 230	210 - 250	170 - 230	-	-	120 - 170	120 - 160	-
		pearlitic	800	-	-	-	120 - 170	120 - 170	90 - 130	90 - 120	-	-	120 - 190	120 - 180	-
	Malleable cast iron	ferritic	450	-	-	-	150 - 210	150 - 210	210 - 250	170 - 230	-	-	150 - 230	-	-
		pearlitic	750	-	-	-	150 - 210	150 - 210	90 - 130	90 - 120	-	-	120 - 170	-	-
N	Aluminum alloys, long chipping	not heat treatable	200	-	-	-	-	-	-	-	-	-	-	-	-
		heat treatable, heat treated	350	-	-	-	-	-	-	-	-	-	-	-	-
	Casted aluminum alloys	≤ 12% Si, hardened	250	-	-	-	-	-	-	-	-	-	-	-	-
		≤ 12% Si, heat treatable, heat treated	300	-	-	-	-	-	-	-	-	-	-	-	-
		≤ 12% Si, not heat treatable	450	-	-	-	-	-	-	-	-	-	-	-	-
	Copper and copper alloys (brass / bronze)	Lead alloys, Pb > 1%	400	-	-	-	-	-	-	-	-	-	-	-	-
		Brass, bronze	300	-	-	-	-	-	-	-	-	-	-	-	-
		Aluminum bronze	500	-	-	-	-	-	-	-	-	-	-	-	-
		Copper and electrolyte copper	200	-	-	-	-	-	-	-	-	-	-	-	-
	Nonferrous materials	Duroplastics		-	-	-	-	-	-	-	-	-	-	-	-
		Reinforced plastics		-	-	-	-	-	-	-	-	-	-	-	-
		Hard rubber		-	-	-	-	-	-	-	-	-	-	-	-
S	High temperature resistant alloys	Fe-alloyed annealed	700	-	-	-	20 - 70	20 - 50	-	-	20 - 40	-	-	20 - 50	20 - 40
		Fe-alloyed hardened	950	-	-	-	20 - 70	20 - 50	-	-	15 - 35	-	-	20 - 50	15 - 35
		Ni- oder Co- based annealed	800	-	-	-	15 - 60	15 - 40	-	-	8 - 25	-	-	15 - 40	10 - 30
		Ni- oder Co- based casting	1100	-	-	-	15 - 50	15 - 30	-	-	4 - 15	-	-	10 - 25	5 - 18
		Ni- oder Co- based hardened	1200	-	-	-	15 - 50	15 - 30	-	-	4 - 15	-	-	20 - 35	5 - 18
	Titanium alloys, high strength	Pure titanium	500 - 700	-	-	-	-	-	-	-	-	-	-	20 - 60	-
	Alpha- and beta-alloys, hardened		700 - 1000	-	-	-	-	-	-	-	-	-	-	25 - 45	-
H	Hardened steel	hardened and tempered	1000 - 1350	-	-	-	-	-	-	-	-	-	-	-	-
		hardened and tempered	1350 - 1700	-	-	-	-	-	-	-	-	-	-	-	-
	Hard cast iron	casting	1350	-	-	-	-	-	-	-	-	-	-	-	-
	Hardened cast iron	hardened and tempered	1900	-	-	-	-	-	-	-	-	-	-	-	-

The datas cutting speeds given are approximate values. It is necessary to adjust them to the individual machining operation.

More grades on the following pages.

Turning – High Positive Inserts

coated

ISO	Material		Tensile strength [N/mm²]	Cutting speed Vc [m/min]							
				AM15C	AM5015	AM5025	AM5110	AM5120	AM5120+	AM5220	AP5210
P	Unalloyed steel and cast steel	ca. 0,15% C	350	220 - 320	220 - 320	180 - 280	220 - 350	220 - 320	180 - 280	180 - 280	220 - 370
		ca. 0,45% C	650	180 - 250	180 - 290	160 - 250	180 - 310	180 - 290	160 - 250	160 - 250	180 - 330
		ca. 0,75% C	1000	140 - 200	150 - 250	120 - 220	150 - 270	150 - 250	120 - 220	120 - 220	150 - 290
	Low alloyed steel and cast steel		600	180 - 250	180 - 280	160 - 250	180 - 300	180 - 280	-	160 - 250	180 - 320
			900	160 - 220	170 - 250	140 - 230	170 - 270	170 - 250	-	140 - 230	170 - 290
			1200	140 - 200	150 - 220	120 - 200	150 - 240	150 - 220	-	120 - 200	150 - 260
	High alloyed steel, high alloyed tool steel and cast steel	annealed	700	140 - 230	80 - 160	70 - 150	80 - 180	80 - 160	-	70 - 150	80 - 180
		hardened and tempered	1100	110 - 200	40 - 130	35 - 120	40 - 140	40 - 130	-	35 - 120	40 - 150
	Stainless steel and cast steel	ferritic / martensitic, annealed	700	170 - 260	60 - 180	50 - 160	40 - 180	40 - 150	50 - 160	50 - 160	40 - 140
		martensitic, hardened and tempered	1000	110 - 200	40 - 140	40 - 140	40 - 160	40 - 130	40 - 140	40 - 140	40 - 120
M	Stainless steel and cast steel	austenitic and austenitic/ferritic	450 - 600	210 - 250	80 - 160	70 - 150	80 - 180	80 - 160	70 - 150	70 - 150	70 - 150
		chilled	600 - 900	100 - 170	40 - 130	35 - 120	40 - 140	40 - 130	35 - 120	35 - 120	35 - 120
K	Cast iron	pearlitic, ferritic	500 - 700	210 - 250	180 - 300	180 - 300	180 - 350	180 - 300	180 - 300	180 - 300	180 - 350
		pearlitic, martensitic	700 - 850	90 - 130	160 - 280	160 - 280	160 - 300	160 - 280	160 - 280	160 - 280	160 - 300
			800 - 1100	90 - 130	120 - 240	120 - 240	120 - 270	120 - 240	120 - 240	120 - 240	120 - 270
	Cast iron with nodular graphite	ferritic	550	210 - 250	140 - 230	130 - 210	140 - 230	140 - 230	-	140 - 230	140 - 230
		pearlitic	800	90 - 130	120 - 170	110 - 150	120 - 170	120 - 170	-	120 - 170	120 - 170
	Malleable cast iron	ferritic	450	210 - 250	150 - 210	130 - 200	150 - 210	150 - 210	-	150 - 210	150 - 210
		pearlitic	750	90 - 130	150 - 210	130 - 200	150 - 210	150 - 210	-	150 - 210	150 - 210
N	Aluminum alloys, long chipping	not heat treatable	200	-	-	-	-	-	-	-	-
		heat treatable, heat treated	350	-	-	-	-	-	-	-	-
	Casted aluminum alloys	≤ 12% Si, hardened	250	-	-	-	-	-	-	-	-
		≤ 12% Si, heat treatable, heat treated	300	-	-	-	-	-	-	-	-
		≤ 12% Si, not heat treatable	450	-	-	-	-	-	-	-	-
	Copper and copper alloys (brass / bronze)	Lead alloys, Pb > 1%	400	-	200 - 500	200 - 400	200 - 650	200 - 500	150 - 500	-	-
		Brass, bronze	300	-	200 - 500	200 - 400	200 - 650	200 - 500	150 - 500	-	-
		Aluminum bronze	500	-	160 - 450	160 - 400	160 - 350	160 - 450	120 - 400	-	-
		Copper and electrolyte copper	200	-	100 - 320	100 - 300	120 - 220	100 - 320	120 - 250	-	-
	Nonferrous materials	Duroplastics		-	160 - 600	-	160 - 600	160 - 600	-	-	-
		Reinforced plastics		-	100 - 300	-	100 - 300	100 - 300	100 - 300	-	-
		Hard rubber		-	-	-	-	80 - 250	-	-	-
S	High temperature resistant alloys	Fe-alloyed annealed	700	-	20 - 60	20 - 60	20 - 70	20 - 60	20 - 60	20 - 60	20 - 70
		Fe-alloyed hardened	950	-	20 - 60	20 - 60	20 - 70	20 - 60	20 - 60	20 - 60	20 - 70
		Ni- oder Co- based annealed	800	-	15 - 50	15 - 50	15 - 60	15 - 50	15 - 50	15 - 50	15 - 60
		Ni- oder Co- based casting	1100	-	15 - 40	15 - 40	15 - 50	15 - 40	15 - 40	15 - 40	15 - 50
		Ni- oder Co- based hardened	1200	-	15 - 40	15 - 40	15 - 50	15 - 40	15 - 40	15 - 40	15 - 50
	Titanium alloys, high strength	Pure titanium	500 - 700	-	90 - 180	90 - 170	100 - 210	90 - 180	-	-	-
	Alpha- and beta-alloys, hardened		700 - 1000	-	40 - 80	35 - 70	40 - 90	40 - 80	-	-	-
H	Hardened steel	hardened and tempered	1000 - 1350	-	30 - 50	30 - 50	-	30 - 50	-	-	-
		hardened and tempered	1350 - 1700	-	10 - 25	10 - 25	-	10 - 25	-	-	-
	Hard cast iron	casting	1350	-	40 - 70	40 - 70	-	40 - 70	-	-	-
	Hardened cast iron	hardened and tempered	1900	-	10 - 25	10 - 25	-	10 - 25	-	-	-

The datas cutting speeds given are approximate values. It is necessary to adjust them to the individual machining operation.

More grades on the following pages.

Turning – High Positive Inserts

coated

ISO	Material		Tensile strength [N/mm²]	Cutting speed Vc [m/min]						
				AL10	AL20	AT10	AT20	PVD1	PVD2	AD2
P	Unalloyed steel and cast steel	ca. 0,15% C	350	220 - 320	180 - 280	220 - 320	180 - 280	200 - 290	160 - 250	-
		ca. 0,45% C	650	180 - 290	160 - 250	180 - 290	160 - 250	160 - 260	140 - 220	-
		ca. 0,75% C	1000	150 - 250	120 - 220	150 - 250	120 - 220	130 - 230	110 - 180	-
	Low alloyed steel and cast steel		600	180 - 280	160 - 250	180 - 280	160 - 250	160 - 250	140 - 220	-
			900	170 - 250	140 - 230	170 - 250	140 - 230	150 - 230	130 - 200	-
			1200	150 - 220	120 - 200	150 - 220	120 - 200	130 - 200	110 - 190	-
	High alloyed steel, high alloyed tool steel and cast steel	annealed	700	-	-	-	-	-	-	-
		hardened and tempered	1100	-	-	-	-	-	-	-
	Stainless steel and cast steel	ferritic / martensitic, annealed	700	170 - 290	160 - 280	170 - 290	160 - 280	150 - 260	130 - 220	-
		martensitic, hardened and tempered	1000	140 - 280	130 - 280	140 - 280	130 - 280	120 - 250	110 - 200	-
M	Stainless steel and cast steel	austenitic and austenitic/ferritic	450 - 600	140 - 280	140 - 240	140 - 280	140 - 240	120 - 250	120 - 200	-
		chilled	600 - 900	-	-	-	-	-	-	-
K	Cast iron	pearlitic, ferritic	500 - 700	180 - 300	160 - 270	180 - 300	160 - 270	160 - 270	-	-
		pearlitic, martensitic	700 - 850	160 - 280	140 - 250	160 - 280	140 - 250	140 - 250	-	-
			800 - 1100	120 - 240	110 - 220	120 - 240	110 - 220	110 - 220	-	-
	Cast iron with nodular graphite	ferritic	550	140 - 230	130 - 210	140 - 230	130 - 210	120 - 210	-	-
		pearlitic	800	120 - 170	110 - 150	120 - 170	110 - 150	110 - 150	-	-
	Malleable cast iron	ferritic	450	150 - 210	130 - 200	150 - 210	130 - 200	130 - 180	-	-
		pearlitic	750	150 - 210	130 - 200	150 - 210	130 - 200	130 - 180	-	-
N	Aluminum alloys, long chipping	not heat treatable	200	-	-	850 - 1300	850 - 1300	750 - 1200	750 - 1200	650 - 2000
		heat treatable, heat treated	350	-	-	400 - 900	400 - 900	350 - 800	350 - 800	300 - 2000
	Casted aluminum alloys	≤ 12% Si, hardened	250	-	-	260 - 800	260 - 800	230 - 700	230 - 700	650 - 2000
		≤ 12% Si, heat treatable, heat treated	300	-	-	200 - 550	200 - 550	180 - 500	180 - 500	300 - 2000
		≤ 12% Si, not heat treatable	450	-	-	200 - 500	200 - 500	180 - 450	180 - 450	200 - 2000
	Copper and copper alloys (brass / bronze)	Lead alloys, Pb > 1%	400	-	-	-	-	-	-	250 - 800
		Brass, bronze	300	-	-	-	-	-	-	250 - 800
		Aluminum bronze	500	-	-	-	-	-	-	250 - 800
		Copper and electrolyte copper	200	-	-	-	-	-	-	130 - 400
	Nonferrous materials	Duroplastics		-	-	-	-	-	-	-
		Reinforced plastics		-	-	-	-	-	-	-
		Hard rubber		-	-	-	-	-	-	-
S	High temperature resistant alloys	Fe-alloyed annealed	700	20 - 50	20 - 50	20 - 50	20 - 50	15 - 45	15 - 45	-
		Fe-alloyed hardened	950	20 - 50	20 - 50	20 - 50	20 - 50	15 - 45	15 - 45	-
		Ni- oder Co- based annealed	800	15 - 40	15 - 40	15 - 40	15 - 40	10 - 35	10 - 35	-
		Ni- oder Co- based casting	1100	15 - 30	15 - 30	15 - 30	15 - 30	10 - 25	10 - 25	-
		Ni- oder Co- based hardened	1200	15 - 30	15 - 30	15 - 30	15 - 30	10 - 25	10 - 25	-
	Titanium alloys, high strength	Pure titanium	500 - 700	-	-	-	-	-	-	-
	Alpha- and beta-alloys, hardened		700 - 1000	-	-	-	-	-	-	-
H	Hardened steel	hardened and tempered	1000 - 1350	-	-	-	-	-	-	-
		hardened and tempered	1350 - 1700	-	-	-	-	-	-	-
	Hard cast iron	casting	1350	-	-	-	-	-	-	-
	Hardened cast iron	hardened and tempered	1900	-	-	-	-	-	-	-

The datas cutting speeds given are approximate values. It is necessary to adjust them to the individual machining operation.

More grades on the following pages.

Turning – Carbide and High Positive Inserts

uncoated

ISO	Material		Tensile strength [N/mm²]	Cutting speed Vc [m/min]			
				AK1010	AK1020	AK10	AK20
P	Unalloyed steel and cast steel	ca. 0,15% C	350	-	-	-	-
		ca. 0,45% C	650	-	-	-	-
		ca. 0,75% C	1000	-	-	-	-
	Low alloyed steel and cast steel		600	-	-	-	-
			900	-	-	-	-
			1200	-	-	-	-
	High alloyed steel, high alloyed tool steel and cast steel	annealed	700	-	-	-	-
		hardened and tempered	1100	-	-	-	-
	Stainless steel and cast steel	ferritic / martensitic, annealed	700	-	-	-	-
		martensitic, hardened and tempered	1000	-	-	-	-
M	Stainless steel and cast steel	austenitic and austenitic/ferritic	450 - 600	-	-	-	-
		chilled	600 - 900	-	-	-	-
K	Cast iron	pearlitic, ferritic	500 - 700	120 - 160	120 - 160	120 - 160	120 - 160
		pearlitic, martensitic	700 - 850	90 - 140	90 - 140	90 - 140	90 - 140
			800 - 1100	80 - 140	80 - 140	80 - 140	80 - 140
	Cast iron with nodular graphite	ferritic	550	130 - 170	130 - 170	130 - 170	130 - 170
		pearlitic	800	90 - 130	90 - 130	90 - 130	90 - 130
	Malleable cast iron	ferritic	450	140 - 200	140 - 200	140 - 200	140 - 200
		pearlitic	750	120 - 160	120 - 160	120 - 160	120 - 160
N	Aluminum alloys, long chipping	not heat treatable	200	300 - 2500	300 - 2500	300 - 2500	300 - 2500
		heat treatable, heat treated	350	200 - 2000	200 - 2000	200 - 2000	200 - 2000
	Casted aluminum alloys	≤ 12% Si, hardened	250	400 - 1500	400 - 1500	400 - 1500	400 - 1500
		≤ 12% Si, heat treatable, heat treated	300	400 - 1500	400 - 1500	400 - 1500	400 - 1500
		≤ 12% Si, not heat treatable	450	200 - 800	200 - 800	200 - 800	200 - 800
	Copper and copper alloys (brass / bronze)	Lead alloys, Pb > 1%	400	250 - 600	250 - 600	250 - 600	250 - 600
		Brass, bronze	300	200 - 600	200 - 600	200 - 600	200 - 600
		Aluminum bronze	500	150 - 400	150 - 400	150 - 400	150 - 400
		Copper and electrolyte copper	200	150 - 300	150 - 300	150 - 300	150 - 300
	Nonferrous materials	Duroplastics		80 - 180	80 - 180	80 - 180	80 - 180
		Reinforced plastics		60 - 150	60 - 150	60 - 150	60 - 150
		Hard rubber		100 - 250	100 - 250	100 - 250	100 - 250
S	High temperature resistant alloys	Fe-alloyed annealed	700	15 - 40	-	15 - 40	-
		Fe-alloyed hardened	950	8 - 28	-	8 - 28	-
		Ni- oder Co- based annealed	800	10 - 30	-	10 - 30	-
		Ni- oder Co- based casting	1100	8 - 25	-	8 - 25	-
		Ni- oder Co- based hardened	1200	8 - 25	-	8 - 25	-
	Titanium alloys, high strength	Pure titanium	500 - 700	60 - 120	60 - 120	60 - 120	-
	Alpha- and beta-alloys, hardened		700 - 1000	30 - 80	30 - 80	30 - 80	30 - 80
H	Hardened steel	hardened and tempered	1000 - 1350	-	-	-	-
		hardened and tempered	1350 - 1700	-	-	-	-
	Hard cast iron	casting	1350	-	-	-	-
	Hardened cast iron	hardened and tempered	1900	-	-	-	-

The datas cutting speeds given are approximate values. It is necessary to adjust them to the individual machining operation.

More grades on the following pages.

Turning – CERMET / PCD / CBN / HSS

ISO	Material		Tensile strength [N/mm²]	Cutting speed Vc [m/min]										
				AP6510	AC90C	AP6010	ACE6	T15	AH7510	AH7516	AH7520	AB8020	HSS-TiN	HSS-TiAlN
P	Unalloyed steel and cast steel	ca. 0,15% C	350	100 - 500	160 - 460	100 - 450	100 - 400	100 - 400	-	-	-	-	70 - 100	80 - 110
		ca. 0,45% C	650	80 - 500	90 - 430	80 - 450	80 - 370	80 - 370	-	-	-	-	65 - 90	70 - 100
		ca. 0,75% C	1000	50 - 350	60 - 400	50 - 350	50 - 350	60 - 280	-	-	-	-	35 - 55	30 - 60
	Low alloyed steel and cast steel		600	80 - 500	90 - 350	80 - 450	80 - 300	80 - 300	-	-	-	-	30 - 80	35 - 90
			900	70 - 500	80 - 300	70 - 450	70 - 270	70 - 300	-	-	-	-	30 - 80	35 - 90
			1200	50 - 350	60 - 300	50 - 350	50 - 250	80 - 220	-	-	-	-	30 - 60	35 - 70
	High alloyed steel, high alloyed tool steel and cast steel	annealed	700	60 - 320	90 - 230	60 - 250	80 - 200	60 - 200	-	-	-	-	30 - 60	35 - 70
		hardened and tempered	1100	50 - 180	60 - 180	50 - 180	50 - 160	60 - 200	-	-	-	-	-	-
	Stainless steel and cast steel	ferritic / martensitic, annealed	700	80 - 350	90 - 290	80 - 300	80 - 250	70 - 270	-	-	-	-	20 - 35	20 - 40
		martensitic, hardened and tempered	1000	80 - 400	-	80 - 350	80 - 250	70 - 250	-	-	-	-	-	-
M	Stainless steel and cast steel	austenitic and austenitic/ferritic	450 - 600	80 - 380	-	80 - 300	80 - 240	80 - 240	-	-	-	-	20 - 35	20 - 40
		chilled	600 - 900	60 - 350	-	60 - 300	80 - 240	80 - 200	-	-	-	-	-	-
K	Cast iron	pearlitic, ferritic	500 - 700	100 - 500	-	100 - 300	80 - 300	-	700 - 2000	-	-	-	-	-
		pearlitic, martensitic	700 - 850	100 - 380	-	100 - 300	80 - 260	-	500 - 900	-	-	-	-	-
			800 - 1100	100 - 350	-	100 - 300	80 - 240	-	-	-	-	-	-	-
	Cast iron with nodular graphite	ferritic	550	80 - 350	80 - 300	100 - 300	80 - 300	80 - 300	-	-	-	-	-	-
		pearlitic	800	80 - 350	80 - 250	100 - 300	80 - 250	80 - 250	-	-	-	-	-	-
	Malleable cast iron	ferritic	450	80 - 350	80 - 350	100 - 300	80 - 350	80 - 350	-	-	-	-	-	-
		pearlitic	750	80 - 350	60 - 250	100 - 300	60 - 250	60 - 250	-	-	-	-	-	-
N	Aluminum alloys, long chipping	not heat treatable	200	-	-	-	-	-	-	-	-	400 - 2500	400 - 900	400 - 900
		heat treatable, heat treated	350	-	-	-	-	-	-	-	-	300 - 2500	140 - 240	150 - 250
	Casted aluminum alloys	≤ 12% Si, hardened	250	-	-	-	-	-	-	-	-	400 - 2000	140 - 240	150 - 250
		≤ 12% Si, heat treatable, heat treated	300	-	-	-	-	-	-	-	-	400 - 2000	140 - 240	150 - 250
		≤ 12% Si, not heat treatable	450	-	-	-	-	-	-	-	-	400 - 1800	60 - 130	70 - 140
	Copper and copper alloys (brass / bronze)	Lead alloys, Pb > 1%	400	-	-	-	-	-	-	-	-	300 - 1800	90 - 110	100 - 120
		Brass, bronze	300	-	-	-	-	-	-	-	-	400 - 1600	-	-
		Aluminum bronze	500	-	-	-	-	-	-	-	-	300 - 1800	-	-
		Copper and electrolyte copper	200	-	-	-	-	-	-	-	-	300 - 1800	110 - 180	120 - 200
	Nonferrous materials	Duroplastics		-	-	-	-	-	-	-	-	-	80 - 140	90 - 150
		Reinforced plastics		-	-	-	-	-	-	-	-	200 - 900	-	-
		Hard rubber		-	-	-	-	-	-	-	-	-	-	-
S	High temperature resistant alloys	Fe-alloyed annealed	700	-	-	-	-	-	300 - 500	-	-	-	10 - 20	10 - 25
		Fe-alloyed hardened	950	-	-	-	-	-	250 - 350	-	-	-	10 - 20	10 - 25
		Ni- oder Co- based annealed	800	-	-	-	-	-	280 - 400	-	-	-	10 - 20	10 - 25
		Ni- oder Co- based casting	1100	-	-	-	-	-	200 - 300	-	-	-	-	-
		Ni- oder Co- based hardened	1200	-	-	-	-	-	200 - 300	-	-	-	-	-
	Titanium alloys, high strength	Pure titanium	500 - 700	-	-	-	-	-	-	-	-	100 - 400	15 - 30	15 - 35
	Alpha- and beta-alloys, hardened		700 - 1000	-	-	-	-	-	-	-	-	100 - 350	15 - 30	15 - 35
H	Hardened steel	hardened and tempered	1000 - 1350	-	-	-	-	-	-	120 - 250	80 - 180	-	-	-
		hardened and tempered	1350 - 1700	-	-	-	-	-	-	-	50 - 150	-	-	-
	Hard cast iron	casting	1350	-	-	-	-	-	60 - 150	-	-	-	-	-
	Hardened cast iron	hardened and tempered	1900	-	-	-	-	-	50 - 150	-	-	-	-	-

The datas cutting speeds given are approximate values. It is necessary to adjust them to the individual machining operation.

More grades on the following pages.

Thread Turning

ISO	Material		Tensile strength [N/mm²]	Cutting speed Vc [m/min]				
				AL100	AM7C	AM15C	AK20(P)	HSS-TiN
P	Unalloyed steel and cast steel	ca. 0,15% C	350	115 - 190	-	140 - 200	-	20 - 50
		ca. 0,45% C	650	100 - 190	-	130 - 180	-	20 - 40
		ca. 0,75% C	1000	70 - 160	-	80 - 160	-	15 - 25
	Low alloyed steel and cast steel		600	85 - 145	-	100 - 155	-	20 - 45
			900	75 - 140	-	90 - 145	-	10 - 25
			1200	70 - 135	-	80 - 135	-	10 - 25
	High alloyed steel, high alloyed tool steel and cast steel	annealed	700	70 - 110	-	70 - 115	-	-
		hardened and tempered	1100	50 - 100	-	50 - 100	-	-
	Stainless steel and cast steel	ferritic / martensitic, annealed	700	75 - 140	-	-	-	25 - 50
		martensitic, hardened and tempered	1000	60 - 120	-	-	-	20 - 40
M	Stainless steel and cast steel	austenitic and austenitic/ferritic	450 - 600	70 - 130	70 - 150	70 - 120	-	-
		chilled	600 - 900	40 - 110	40 - 120	40 - 90	-	-
K	Cast iron	pearlitic, ferritic	500 - 700	70 - 130	-	-	-	-
		pearlitic, martensitic	700 - 850	60 - 120	-	-	-	-
			800 - 1100	60 - 115	-	-	-	-
	Cast iron with nodular graphite	ferritic	550	125 - 160	-	-	-	-
		pearlitic	800	90 - 120	-	-	-	-
	Malleable cast iron	ferritic	450	80 - 180	-	70 - 150	70 - 95	-
		pearlitic	750	-	-	-	-	-
N	Aluminum alloys, long chipping	not heat treatable	200	100 - 365	-	100 - 240	100 - 250	30 - 60
		heat treatable, heat treated	350	80 - 220	-	80 - 170	80 - 160	25 - 50
	Casted aluminum alloys	≤ 12% Si, hardened	250	200 - 400	-	-	80 - 120	25 - 50
		≤ 12% Si, heat treatable, heat treated	300	200 - 280	-	-	70 - 100	20 - 40
		≤ 12% Si, not heat treatable	450	60 - 180	-	-	50 - 120	15 - 30
	Copper and copper alloys (brass / bronze)	Lead alloys, Pb > 1%	400	80 - 200	120 - 200	100 - 250	110 - 190	15 - 35
		Brass, bronze	300	80 - 225	-	80 - 200	70 - 170	15 - 35
		Aluminum bronze	500	-	-	-	-	15 - 30
		Copper and electrolyte copper	200	120 - 240	120 - 300	100 - 250	110 - 190	15 - 35
	Nonferrous materials	Duroplastics		-	-	-	-	-
		Reinforced plastics		-	-	-	-	-
		Hard rubber		-	-	-	-	-
S	High temperature resistant alloys	Fe-alloyed annealed	700	45 - 60	-	-	30 - 50	-
		Fe-alloyed hardened	950	30 - 50	-	-	25 - 40	-
		Ni- oder Co- based annealed	800	20 - 30	-	-	20 - 30	-
		Ni- oder Co- based casting	1100	-	-	-	-	-
		Ni- oder Co- based hardened	1200	15 - 25	-	-	15 - 25	-
	Titanium alloys, high strength	Pure titanium	500 - 700	140 - 170	-	-	60 - 100	-
	Alpha- and beta-alloys, hardened		700 - 1000	50 - 70	-	-	40 - 60	-
H	Hardened steel	hardened and tempered	1000 - 1350	-	-	-	-	-
		hardened and tempered	1350 - 1700	-	-	-	-	-
	Hard cast iron	casting	1350	-	-	-	-	-
	Hardened cast iron	hardened and tempered	1900	45 - 60	-	45 - 60	-	-

The datas cutting speeds given are approximate values. It is necessary to adjust them to the individual machining operation.

Designation	Page
A	
A-DCLN...	85
A-DDUN...	86
A-DSKN...	86
A-DWLN...	87
A-PCLN...	89
A-PDUN...	90
A-PTFN...	92
A-PWLN...	93
A-SCFC...	94
A-SCLC...	96
A-SCLD...	97
A-SCUP...	99
A-SCXP...	100
A-SDQC...	101
A-SDUC...	102
A-SSSC...	105
A-STFC...	106
A-STUC...	108
A-SV95C...	112
A-SVLC...	109
A-SVOC...	110
A-SVQC...	111
A-SVUC...	113
A-SVVC...	114
A-SVXC...	115
A-SWFC...	116
A-SWLC...	117
A-SWUC...	119
C	
C-ACKUC... Carbide	84
CCGT... Carbide	148
CCGT... High Positive	190
CCGT... CERMET	214
CCGT... PCD/CBN	230
CCGW... Carbide	148
CCGW... PCD/CBN	231
CCGX... Carbide	148
CCMT... Carbide	150
CCMT... CERMET	214
CCMX... Carbide	152
CCXT... Carbide	150
CCXT... High Positive	192
CDGT... Carbide	152
CDGT... High Positive	194
CDGT... CERMET	215
CDGW... Carbide	152
CKJC...	20
CKJN...	20
CNGA... PCD/CBN	232
CNGM... High Positive	195
CNGP... Carbide	154
CNMG... Carbide	154
CNMG... CERMET	215
CNMM... Carbide	154
CPET... Carbide	156
CPET... CERMET	216
CPGT... Carbide	156
CPGT... High Positive	194
CPGT... CERMET	216
CPGT... PCD/CBN	234
CPGW... Carbide	156
CPMT... Carbide	156
CPMT... CERMET	216
CTAP...	21
CTFP...	21
CTGP...	22
D	
DCGT... Carbide	158
DCGT... CERMET	217
DCGT... PCD/CBN	233
DCGT... High Positive	196
DCGW... Carbide	158
DCGW... PCD/CBN	234
DCGX... Carbide	158
DCLN...	23
DCMT... Carbide	160
DCMT... CERMET	217
DCMX... WIPER	160
DCXT... Carbide	160
DCXT... High Positive	196
DDJN...	24
DNGP... Carbide	162
DNMG... Carbide	162
DNMG... CERMET	218
DNMP... Carbide	162
DSBN...	24
DSDN...	25
DSKN...	25
DSSN...	26
DVJN...	26
DVVN...	27
DWLN...	27
E	
E-PCLN...	89
EPMT... Carbide	164
E-SCFC...	95
E-SCLC...	96
E-SCLD...	97–98
E-SCUP...	99
E-SCXP...	100
E-SDQC...	101
E-SDUC...	102
E-STFC...	107
E-SV95C...	112
E-SVLC...	109
E-SVUC...	113
E-SVVC...	114
E-SVXC...	115
E-SWFC...	116
E-SWLC...	117
E-SWUC...	118–119
K	
KCGX... Carbide	164
KCGX... High Positive	198
KCGX... CERMET	218
KNMX... Carbide	165
KNUX... Carbide	165
L	
LAB 08...	248-251
LST 08...	252-253
LVD 08...	254-255
LGE 08...	256-257
LRD 08...	258-260
LRO 08...	261
M	
MCLC...	22
MSSC...	23
MTJC...	28
P	
PCBN...	29
PCKN...	29
PCLN...	30
PDJN...	31
PDNN...	31
PRDC...	32
PRGC...	33
PRGN...	33
PSBN...	34
PSDN...	35
PSKN...	36
PSSN...	37
PTFN...	38
PTGN...	38
PTTN...	39
PWLN...	39
R	
RCGT... High Positive	198
RCMT... Carbide	166
RCXT... High Positive	198
S	
S-ACKUC...	84
SCAC...	40–41
SCAP...	41
SCDC...	42
SCFC...	43
SCGT... High Positive	200
SCLC...	44–45
SCLP...	45
SCMC...	46
SCMT... Carbide	166
SCMT... CERMET	219
SCMX... Carbide	166
SCRC...	47
SCSC...	48
S-CTFP...	85
SCXP...	48
SCXT... High Positive	200
SDAC...	49–50
SDHC...	51–52
SDJC...	53–54
SDNC...	55–56
SLAO...	244
SLCO...	245
SLXO...	247
S-MCLC...	87
S-MSSC...	88
S-MTUC...	88
SNMG... Carbide	168
SNMG... CERMET	219
SNVR...	296
SNVR...-5L	297
S-PCLN...	89
S-PDUN...	90
SPMR... Carbide	169
SPMR... CERMET	220
S-PSKN...	91
S-PTFN...	92
SPUN... Carbide	169
S-PWLN...	93
SRDC...	57
SRGC...	58
SSBC...	59
S-SCFC...	94
S-SCLC...	96
S-SCLD...	97–98
S-SCUP...	99
S-SCXP...	100
SSDC...	60
S-SDQC...	101
S-SDUC...	102
S-SDXC...	103
SSKC...	61
SSSC...	62
S-SSKC...	104
S-SSSC...	105
S-STFC...	106
S-STUC...	108
S-SV95C...	112
S-SVLC...	109
S-SVQC...	111
S-SVUC...	113
S-SVVC...	114
S-SVXC...	115
S-SWLC...	117
S-SWUC...	119
STAC...	63–64
STCC...	65
STFC...	66
STGC...	67
SVAC...	68
SVGC...	68
SVHC...	69
SVJC...	70–71
SVLC...	71
SVVC...	72–73
SVXC...	73–74
SVZC...	74
SV16...	296–297
SWLC...	75

A

Designation	Page
T	
TCGT… High Positive	202
TCGT… CERMET	220
TCGW… Carbide	170
TCGW… PCD/CBN	235
TCMT… Carbide	170
TCMT… CERMET	220
TCMX… Carbide	171
TCXT… High Positive	202
TNGA… PCD/CBN	235
TNGG… CERMET	221
TNMG… Carbide	172
TNMG… CERMET	221
TPGN… Carbide	174
TPGN… CERMET	221
TPGR… CERMET	221
TPMR… Carbide	174
TPMR… CERMET	221
TPMT… CERMET	222
TPUN… Carbide	174
V	
VBMT… CERMET	222
VCGT… Carbide	176,263
VCGT… High Positive	204
VCGT… CERMET	223
VCGT… PCD/CBN	236
VCGW… Carbide	178
VCGW… PCD/CBN	237
VCGX… Carbide	178
VCMT… Carbide	178
VCMT… CERMET	223
VCXT… Carbide	178
VCXT… High Positive	206
VNGA… PCD/CBN	239
VNGP… Carbide	180
VNMG… Carbide	180
VNMG… CERMET	224
VPGT… High Positive	208
VPGW…High Positive	208
VPXT… High Positive	208
W	
WCGT… Carbide	182
WCGT… High Positive	210
WCGT… CERMET	224
WCMT… Carbide	182
WCMT… CERMET	224
WNGA… PCD/CBN	240
WNGP… Carbide	184
WNMG… Carbide	184
WNMG… CERMET	225

A

ARNO®
WERKZEUGE

Order Hotline: 800-943-4426

Monday - Friday: 8AM to 5PM Central Time

ARNO®
WERKZEUGE

Order Hotline: 800-943-4426

Monday - Friday: 8AM to 5PM Central Time

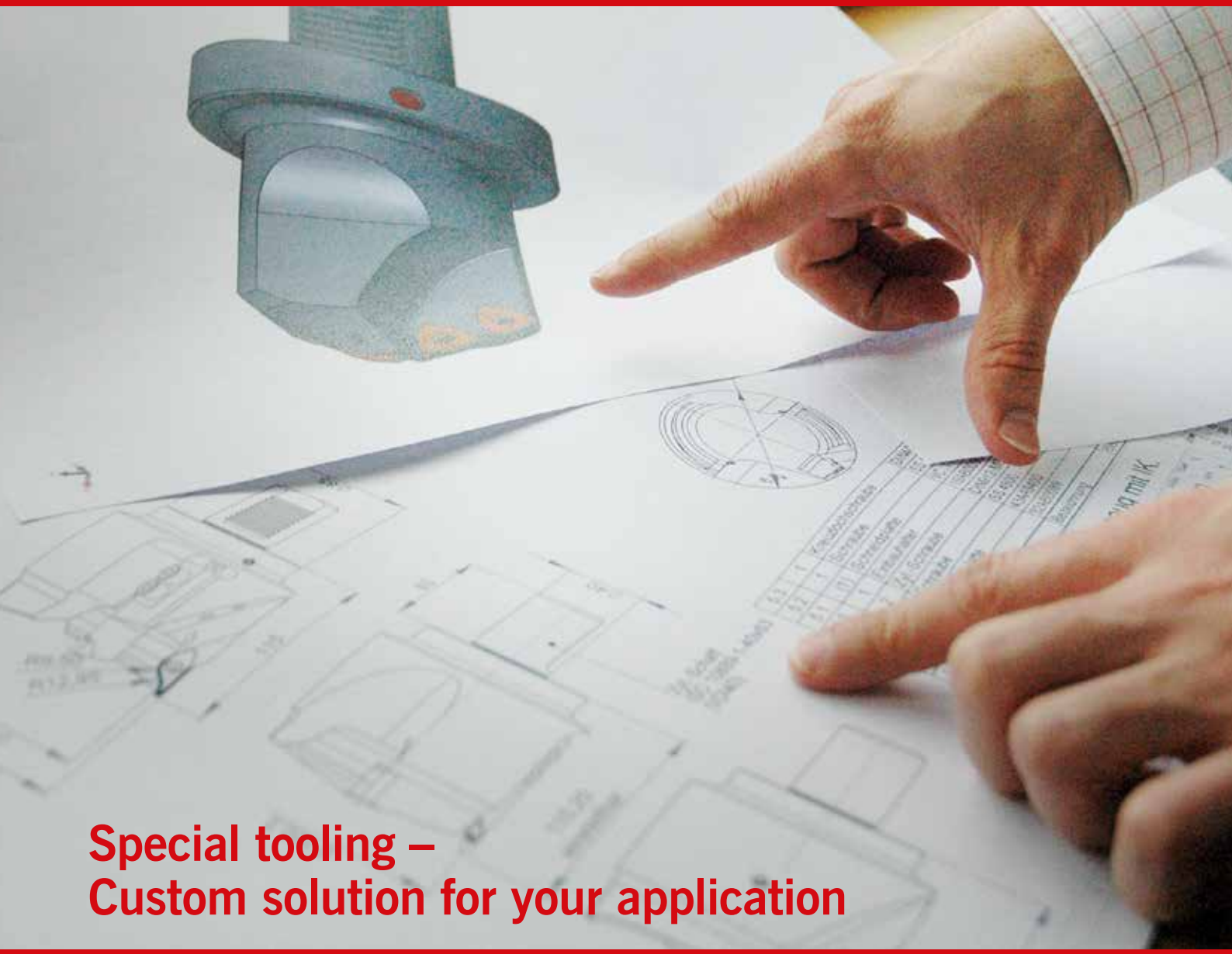

Special tooling – Custom solution for your application

You have an application – We have a solution

Take advantage of our many years of experience in special solutions.
Benefit from more efficient and cost effective custom tooling made by ARNO.
Whether it is special inserts or complex combination tools –
We offer precise, fast and flexible solutions to almost any application.

Find more information under

www.arnousa.com

ARNO®-Werkzeuge

Tools and Inserts for
Parting and Grooving

Tools and Inserts for
Turning and Threading

Milling Cutters and Inserts for
Milling and Thread Milling

Tools and Inserts for
Driiling

© agencyteam · ARNO-12016-D

We have a passion for precision.

We approach the challenges of our customers with passion and enthusiasm to research, develop and precisely manufacture our tools. 70+ years of experience goes into each of our tools. ARNO is certified quality and precision at its best.

SPT SUNCOAST INC. PRECISION TOOLS
ESTABLISHED 1963

ARNO®
WERKZEUGE

Order Hotline: 800-943-4426

Monday - Friday: 8AM to 5PM Central Time

ARNO-Werkzeuge USA, LLC
1101 W DIGGINS ST
HARVARD, IL 60033

Tel.: 815 943 4426
Fax: 815 943 7156
info@arnousa.com
www.arnousa.com

Karl-Heinz Arnold GmbH | **Karlsbader Str. 4** | **D-73760 Ostfildern**
(+49 711 34 802-0 | **7 +49 711 34 802-130** | **info@arno.de** | **www.arno.de**

ARNO (UK) Limited | Unit 3, Sugnall Business Centre | Sugnall, Eccleshall | Staffordshire | ST21 6NF
☎ +44 01785 850 072 | 🖷 +44 01785 850 076 | sales@arno.de | www.arno-tools.co.uk

ARNO Italia S.r.l | Via J.F. Kennedy 19 | 20871 Vimercate (MB)
☎ +39 039 68 52 101 | 🖷 +39 039 60 83 724 | info@arno-italia.it | www.arno-italia.it

ARNO RU Ltd. | Krassnaja Ul. 38 | RU-600015 Vladimir
☎/🖷 +7 4922 541125 | **COT** +7 4922 541135 | info@arnoru.ru | www.arnoru.ru