Product information
- balancing quality: G6.3 / 15,000 rev./min
- coolant supply form AD/B
- from bore d1 = 25 mm with two clamping screws article no. 4903
- SK40 - M16 x 2.0 retention knob
- SK50 - M24 x 3.0 retention knob

Scope of delivery
- incl. clamping screw article no. 4903 and adjustment screw

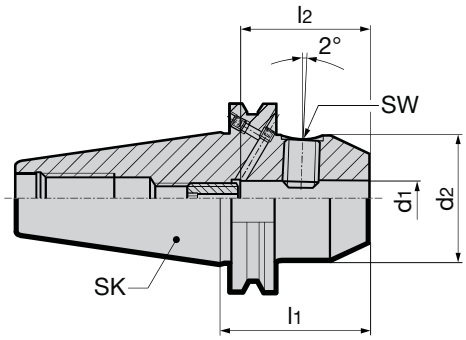

SK taper	clamping-Ø d_1 H5 mm	d_2 mm	d_4 mm	l_1 mm	l_2 mm	SW	kg	Code no.	EDP Number
								Series no	**4322**
40	6	25	15	50	36	3	0.9	6.040	**9043220060400**
40	8	28	20	50	36	4	0.9	8.040	**9043220080400**
40	10	35	25	50	40	5	1.0	10.040	**9043220100400**
40	12	42	30	50	45	6	1.2	12.040	**9043220120400**
40	14	44	32	50	45	6	1.2	14.040	**9043220140400**
40	16	48	36	63	48	6	1.2	16.040	**9043220160400**
40	18	50	38	63	48	6	1.4	18.040	**9043220180400**
40	20	52	40	63	50	8	1.5	20.040	**9043220200400**
40	25	65	45	100	56	10	2.3	25.040	**9043220250400**
40	32	72	56	100	60	10	2.5	32.040	**9043220320400**
50	6	25	15	63	36	3	2.7	6.050	**9043220060500**
50	8	28	20	63	36	4	2.7	8.050	**9043220080500**
50	10	35	25	63	40	5	2.9	10.050	**9043220100500**
50	12	42	30	63	45	6	3.0	12.050	**9043220120500**
50	14	44	32	63	45	6	3.0	14.050	**9043220140500**
50	16	48	36	63	48	6	3.0	16.050	**9043220160500**
50	18	50	38	63	48	6	3.0	18.050	**9043220180500**
50	20	52	40	63	50	8	3.1	20.050	**9043220200500**
50	25	65	45	80	56	10	3.7	25.050	**9043220250500**
50	32	72	56	100	60	10	4.5	32.050	**9043220320500**