HSK-A adaptors for tapping chucks

Product information
- for quick change chucks and synchro tapping chucks with straight shank
- HSK-A to ISO 12164-1/DIN 69893-1

Scope of delivery
- incl. clamping screws Series no. 4903, EDP # 16,001
- order coolant supply set Series no. 4949 separately

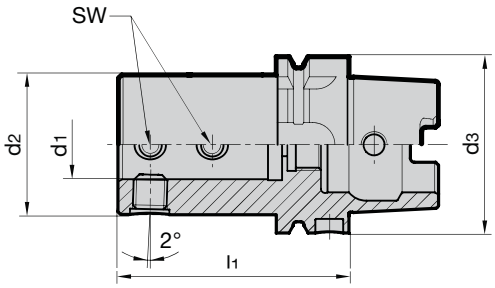

						Series no.	4343
HSK-A d_3	d_1 mm	d_2 mm	l_1 mm	SW	kg	Code no.	**EDP Number**
50	25	50	80	6	0.89	25.050	**9043430250500**
63	25	50	82	6	1.26	25.063	**9043430250630**
80	25	50	87	6	3.10	25.080	**9043430250800**
100	25	50	89	6	4.08	25.100	**9043430251000**

Quick change tapping chucks without internal cooling

Product information
- quick change tapping chucks are provided with a ball guided length compensator that compensates any length difference between spindle feed and pitch of tap thread
- combination shank similar to DIN 1835 for side lock holders

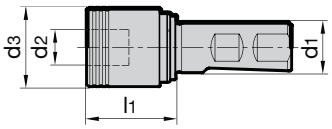

							Series no.	4340
for thread	d_1 mm	d_2 mm	d_3 mm	l_1 mm	tension/ compression ± mm	kg	Code no.	**EDP Number**
M3-M12	25	19	39	45	7.5	0.45	19.025	**9043400190250**
M8-M20	25	31	60	68	10.0	1.10	31.025	**9043400310250**

Product information

- compensates synchronisation errors
- guarantees best thread quality and optimal life
- minimal length compensation ± 0,3 mm in tension and compression direction balances very small pitch differences between synchro spindle and tap
- reduces an increase in axial forces during the cutting cycle to a minimum
- convenient hydraulic clamping using reduction sleeves with active drive
- length-setting screw allows 3 mm readjustment
- Type 1: straight shank for precision clamping chucks (hydraulic chucks or precision power chucks, shrink fit chucks for single application)
  Type 2: combination shank similar to DIN 1835 for side lock holders
- suitable for internal cooling identifiable by black colored ring
- coolant pressure up to max. 80 bar

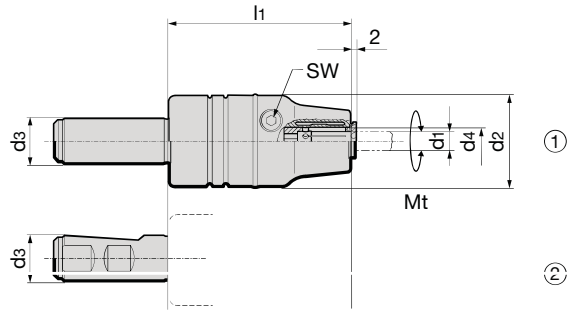

Scope of delivery

- incl. hexagon clamping key Series no. 4912
- incl. adjustment key for adjustment screws

- order setting screw “face”
  Series no. 4364 separately
- order reduction sleeves
  Series no. 4605 or 4606 separately

GÜHROSync

											Series no.	4525
d_3 h6 mm	d_4 mm	type	for shank Ø d_1	for thread	d_2 mm	l_1 mm	Mt max.	SW	kg	Code no.		EDP Number
20	12.00	1	2.8-10	M2-M12	40	80	26 Nm	4	0.7	12.020		**9045250120200**
20	20.00	1	6-16	M4.5-M20	40	94	90 Nm	5	0.8	20.020		**9045250200200**
25	12.00	2	2.8-10	M2-M12	40	80	26 Nm	4	0.7	12.025		**9045250120250**
25	20.00	2	6-16	M4.5-M20	40	94	90 Nm	5	0.8	20.025		**9045250200250**